INSTRUCTIONS

© 2025, Speedway Motors, Inc.

350-610 - 1967-69 Camaro G-Comp X Front Suspension

Kit Contents	
P/N	**Description**
350-100.2	G-Comp Camber Shim Kit
350203	G-Comp X Edition Upper Control Arms
350204	G-Comp X Edition Lower Control Arms
350206	G-Comp X Edition Shock Mount Kit
350207	G-Comp X Edition Hub Bolt Kit
3503502*	G-Comp X Heavy Duty Wheel Bearing Hub Upgrade
350510.2	G-Comp Sway Bar Kit
350501	Heavy Duty 34" Sway Bar
350602	G-Comp X Edition Chassis Brace
350610.1	67-69 F-Body G-Comp X Edition Subframe
350610.2	G-Comp Subframe Hardware Kit
3501100	G-Comp X Edition Spindle Upright
91035011	G-Comp Steering Arms
91035341	T-Bird Power Steering Rack

*** Revision Note – October 15, 2025**
Kit Components List updated to reflect the new #3503502 – G-Comp X Heavy Duty Wheel Bearing Hub Upgrade, replacing #350350 – GM Genuine 85144278 C7 Corvette Front Wheel Hub & Bearing.

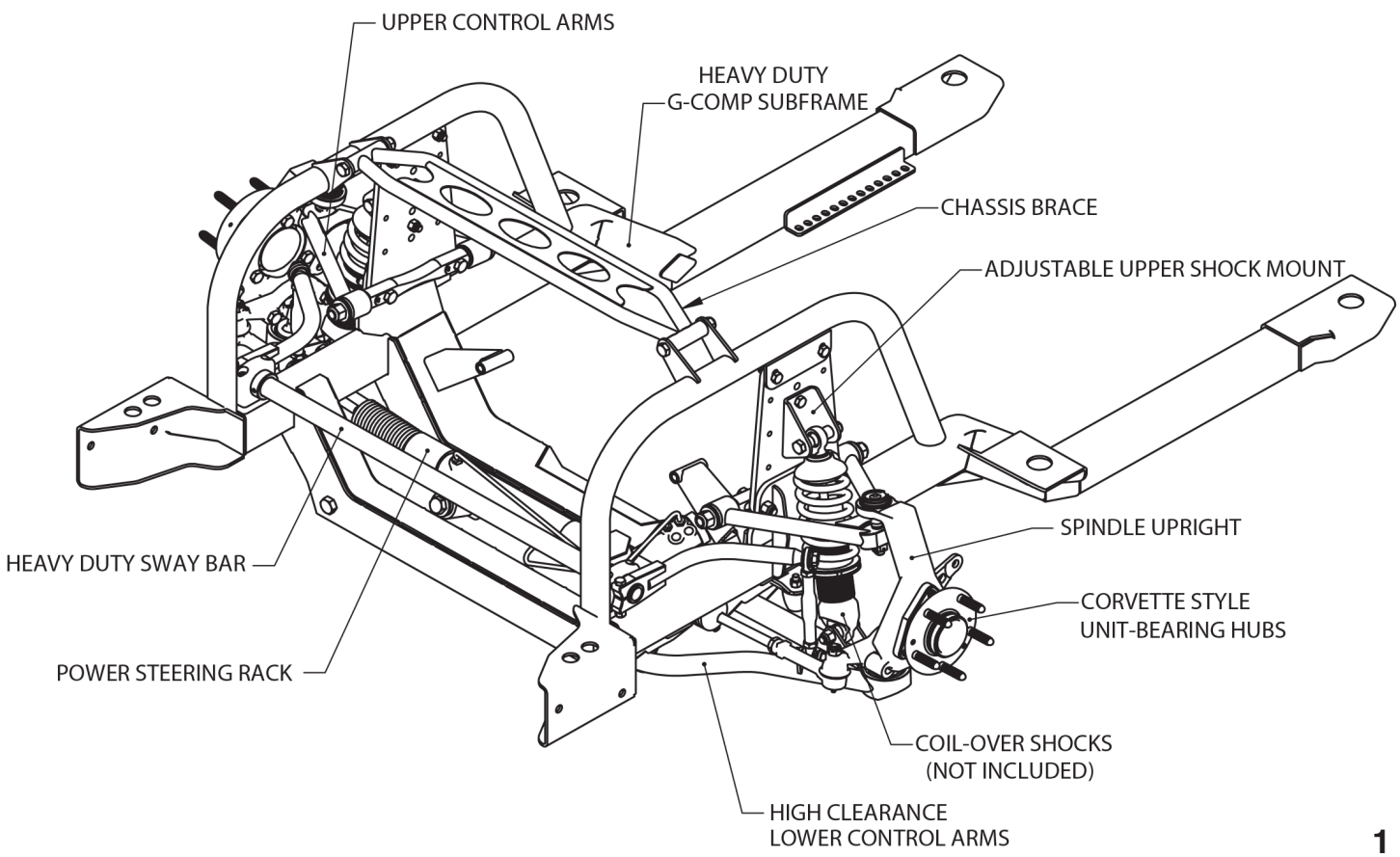

INSTRUCTIONS

© 2025, Speedway Motors, Inc.

Please read through the entirety of the instructions before beginning installation and assembly.

1. Support the car on jack stands or hoist. The front stands must be located on the main floor just behind the firewall. Do not support the car on the front sub-frame.

2. Remove: the hood and inner fenders. Remove the radiator, front bumper, fenders, and core support. Disconnect all electrical components from the firewall forward. Retain all hardware to be used during reassembly. Remove the engine, transmission, and accessories. Support the subframe with a floor jack. Unbolt the subframe from the body and lower it down until the weight is supported by the front tires. The sub-frame can now be rolled out of the way.

3. Install the G-Comp subframe. Now is a good time to replace your old worn out body mount bushings. Place the new upper bushing halves into their locations on the subframe. Using a floor jack, raise the new G-Comp sub-frame into position while lining up the holes in the sub-frame with the body. Install new or reuse your OEM body mount bolts along with the lower body mount bushings and washers. **NOTE:** Start all of the body bolts before tightening any of them completely. Once all of the bolts have been started, make sure the subframe is aligned with the car, and tighten the bolts. With the subframe in place, you can now move the jack stands to the front crossmember. This will make the vehicle more stable while installing the rest of the kit.

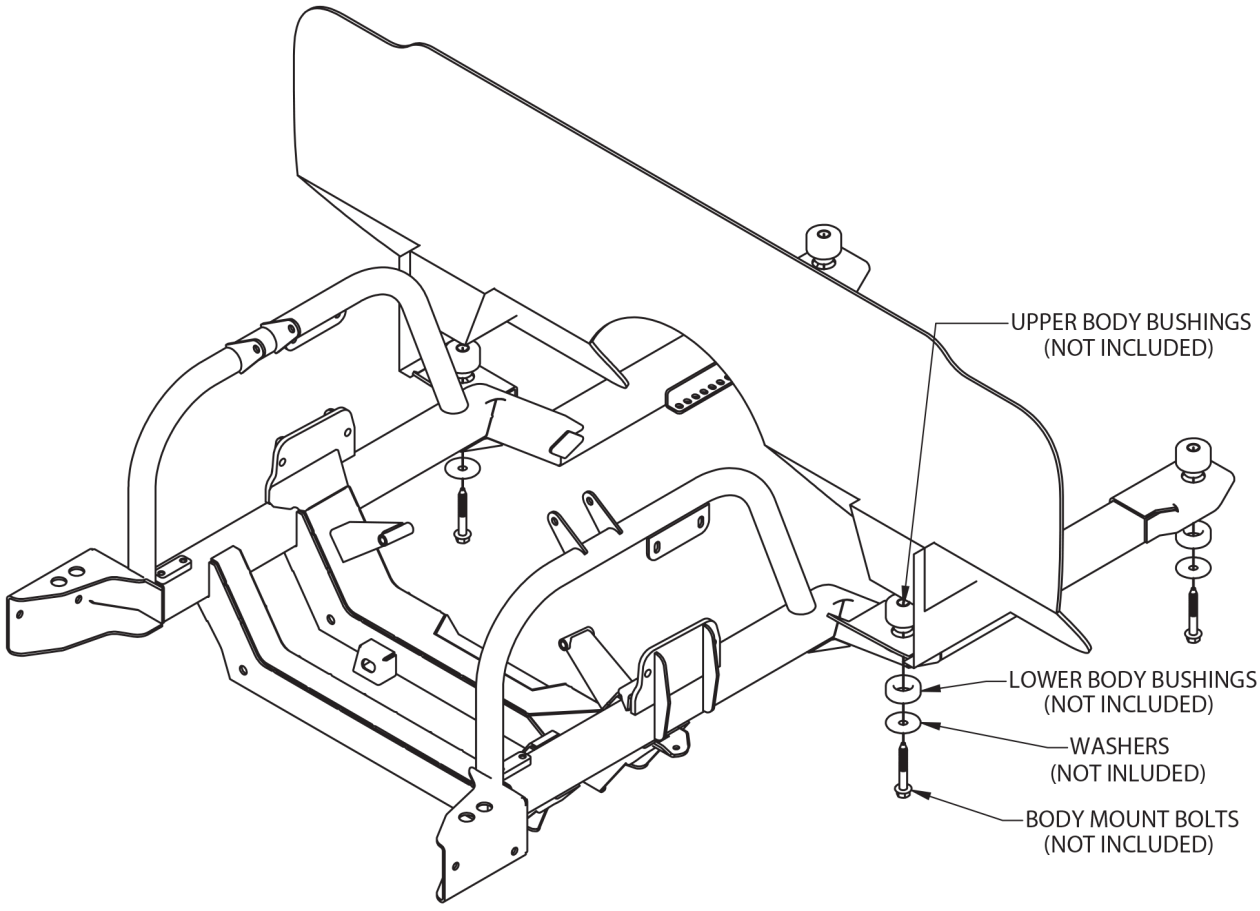

© 2025, Speedway Motors, Inc.

In order to maximize performance of the G-Comp X system it is highly recommended that the front subframe be rigidly connected to the body with a full roll cage. If a full roll cage is not desired, the subframe can also be tied into a reinforced firewall for additional strength. It is imperative that the frame be centered in the vehicle and all suspension components test fit before final welding to the body. High performance solid body mount bushings are strongly suggested to reduce unwanted flex (aluminum part # 5453027, urethane part # 92613838). This is especially important when rigidly connected to a roll cage as regular bushings may place additional strain on welded joints.

Shown below are a few suggested examples:

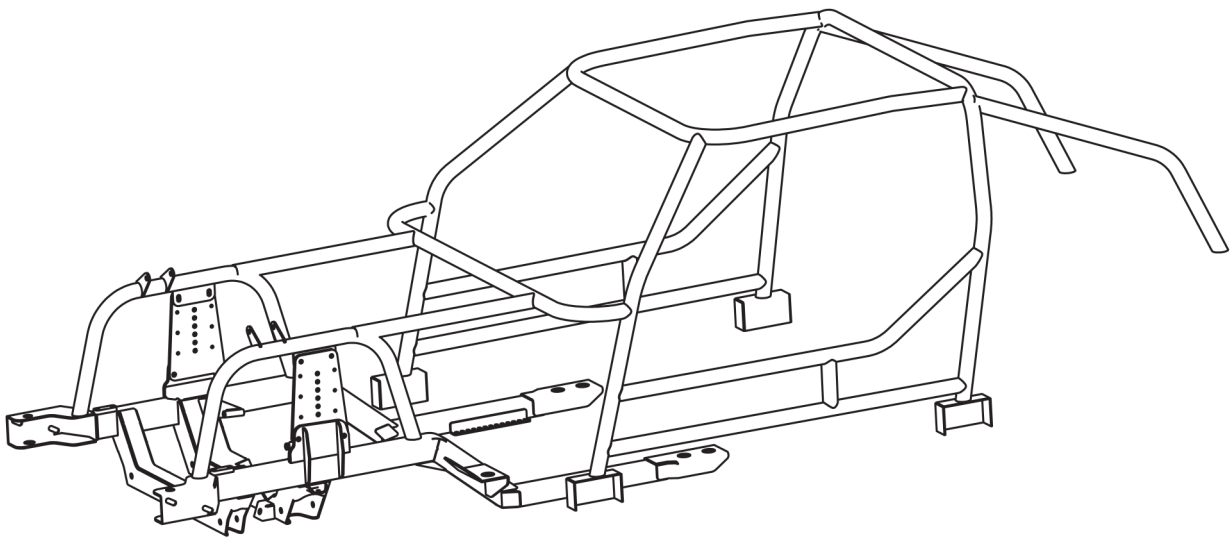

Straight bars provide basic support to the subframe.

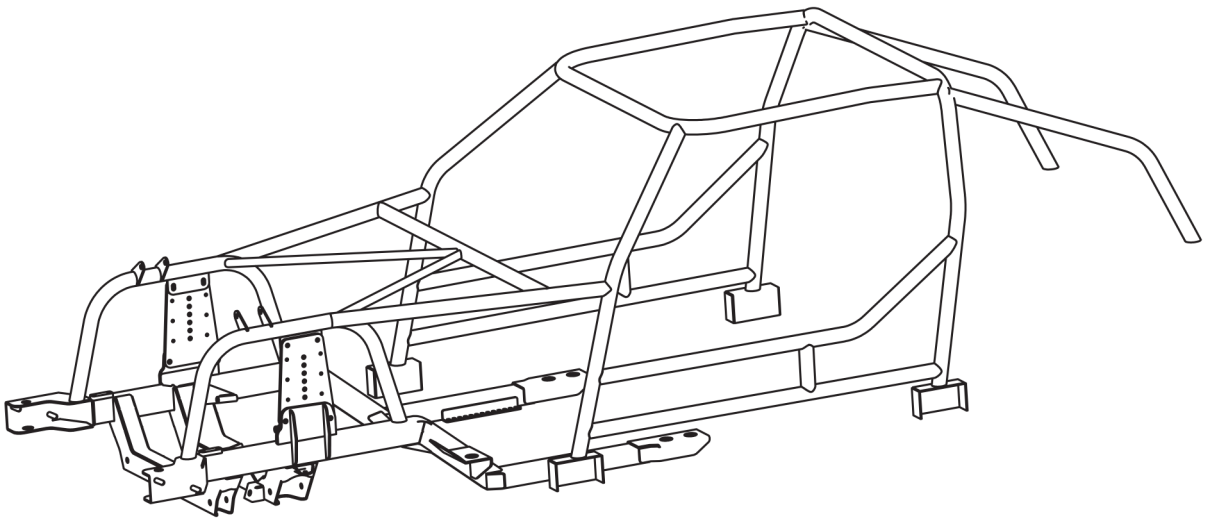

Triangulated bars provide high torsional stiffness and greater support.

© 2025, Speedway Motors, Inc.

4. Steering Rack. This G-comp front suspension kit is designed to use a thunderbird style power steering rack. Install the steering rack as shown, using the two 5/8"-18 x 3 ½" bolts, washers and lock nuts.

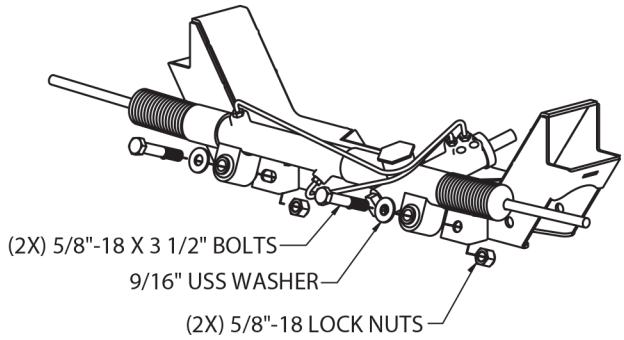

5. Install the lower control arms into the cross member. Align the control arm bushings with the lower control arm holes in the cross-member. The front bolts, 5/8"-18 x 3-1/4" , are to be installed from the front side. The rear bolts are 5/8"-18 x 5-1/2" and are to be installed from the rear. Install the 5/8"-18 lock nuts as shown. Install the lower control arm bump stops to the sub-frame using the supplied 3/8" nuts as shown.

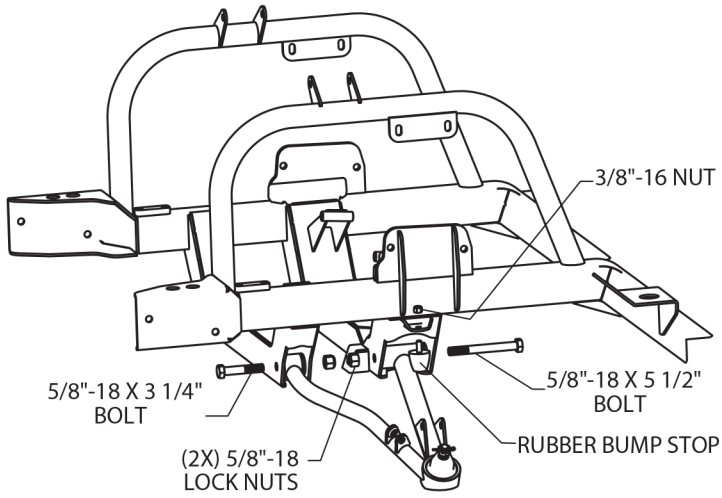

6. Install the shock plates and upper control arms. Place the shock plate between the control arm and sub-frame and install the upper control arm by rotating the cross shaft so the caster shim pockets are facing the center of the vehicle as shown. Mount the upper control arms using the 1/2"-20 x 3" bolts and lock nuts. Install the bolts through the sub-frame, shock plate, cross shaft, and caster shims. Secure with 1/2"-20 lock nuts. Install the 7/16"-20 x 1-1/4" bolts and lock nuts into the top holes of the shock plate to secure it to the support tube. The adjustable upper shock mount can now be installed as shown using the remaining 7/16"-20 x 1-1/4" bolts and lock nuts.

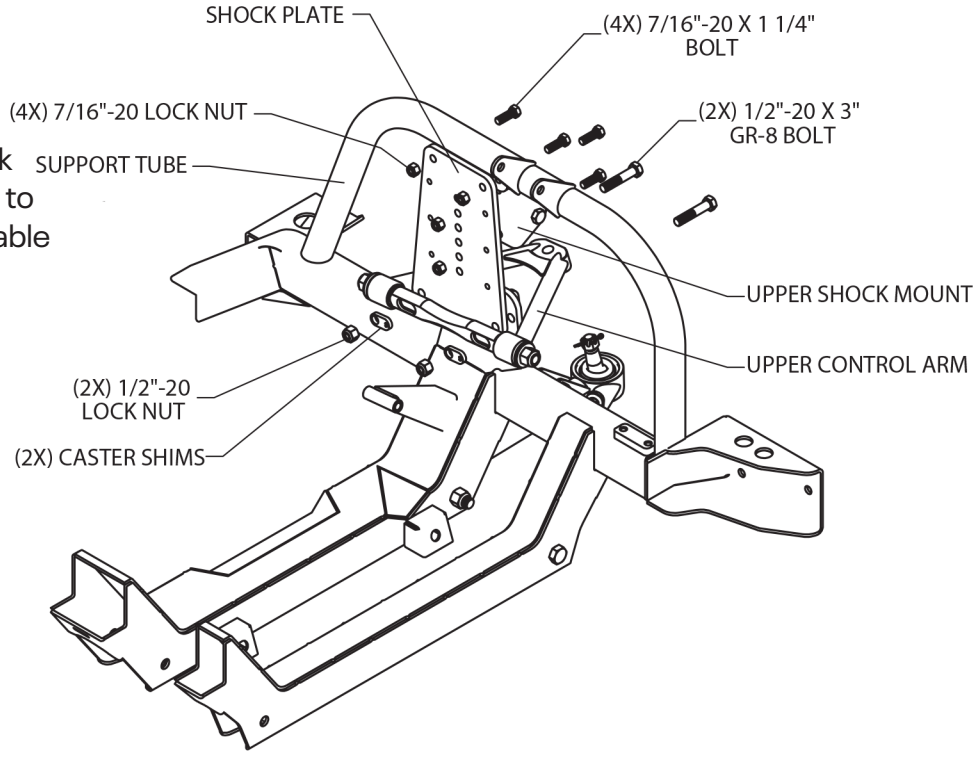

© 2025, Speedway Motors, Inc.

7. Install the uprights and steering arms. Install the upright onto the lower ball joint. Install and tighten the supplied castle nut. Repeat with the upper ball joint and install the cotter pins. Bolt the steering arms to the spindles using the 1/2"-20 x 1-3/4" bolts. **NOTE:** Make sure to use Loctite on the threads.

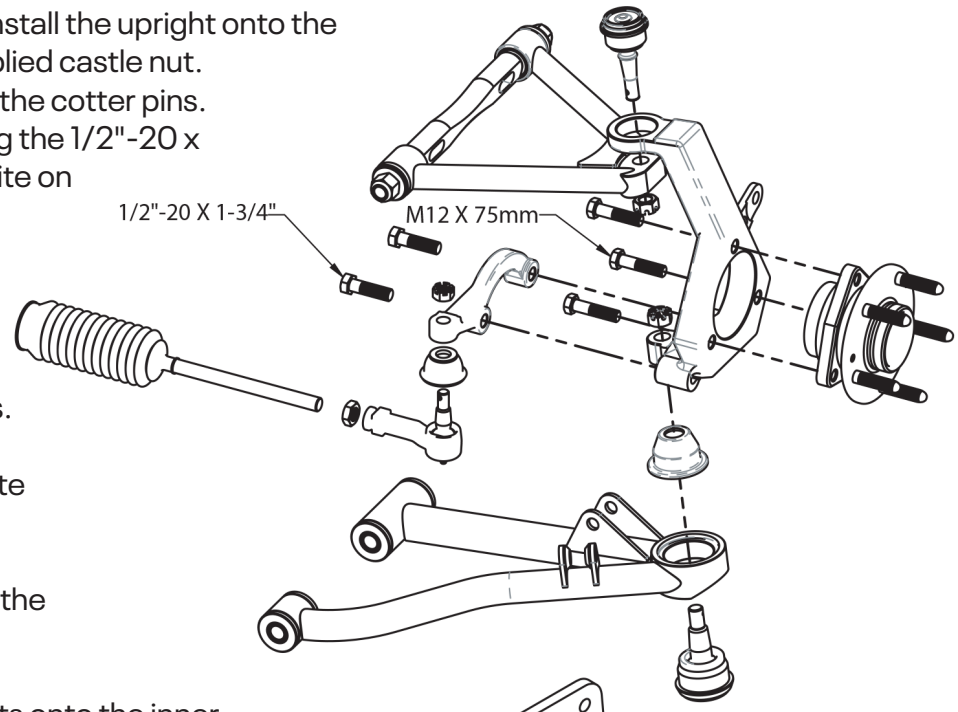

8. Install the hubs. The Corvette style hubs included with this kit use metric hardware, including metric lug nuts. Use the supplied M12 metric bolts to secure the hubs to the uprights using loctite The fit of the hub into the upright is a close tolerance fit. It may be required to remove any paint or powder coating from the inner bore of the upright before assembly.

9. Install the outer tie rod ends and jam nuts onto the inner tie rods of the rack. Thread both tie rod ends on equally. Attach the tie rod ends to the steering arms using the castle nuts supplied with the tie rod ends. Tighten and install the cotter pins. Final alignment will be done at a later time.

10. Install the shocks. Assemble the coil over by installing the threaded adjusting collar onto the threaded shock body. Adjust the collar all the way to the end of the threads. Place the spring over the shock body and install the spring cup onto the shock. Using the 1/2"-20 x 2-1/2" bolts and two 3/16" wide spacers, install the shock into the lower mount on the control arm as shown and secure with a 1/2"-20 lock nut. Install the 1/2"- 20 x 3-1/4" upper shock bolts and 5/8" wide spacers, placing one spacer on each side of the shock bearing. Secure with a 1/2"-20 lock nut. **NOTE:** This kit is design to use shocks with a 4" stroke and compressed length of 10" or a 5" stroke with a compressed length of 12". Shock ends should be ½" bearings with a mounting width of 1". For recommended part numbers please visit our website or contact one of our tech experts.

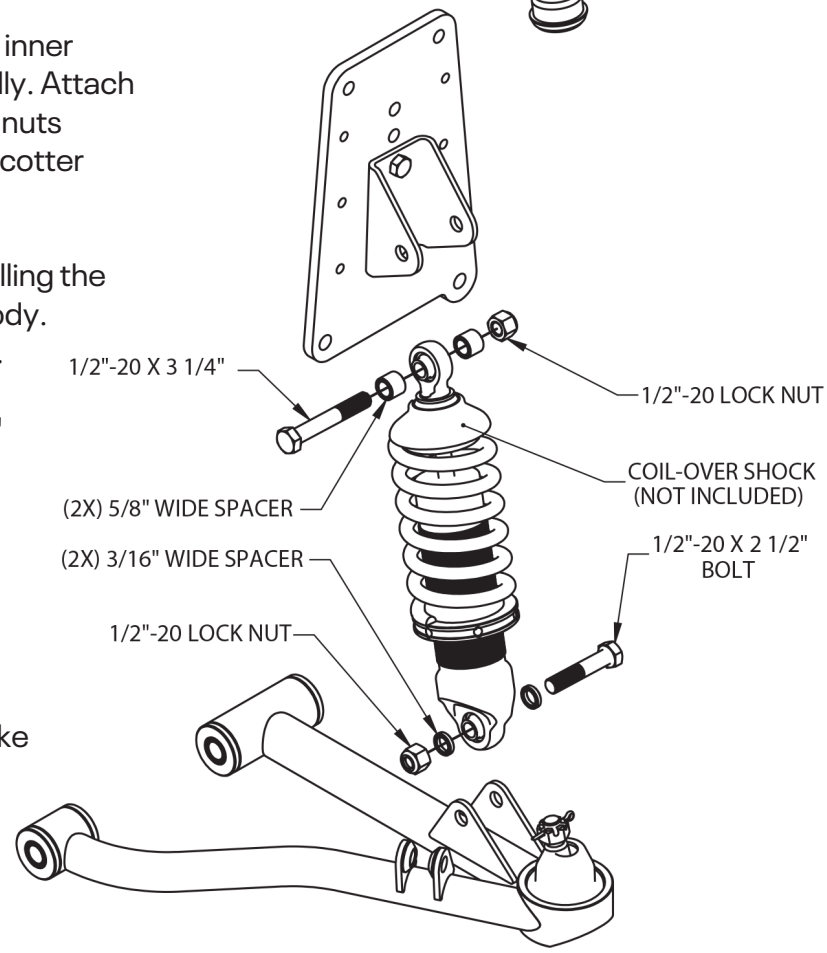

© 2025, Speedway Motors, Inc.

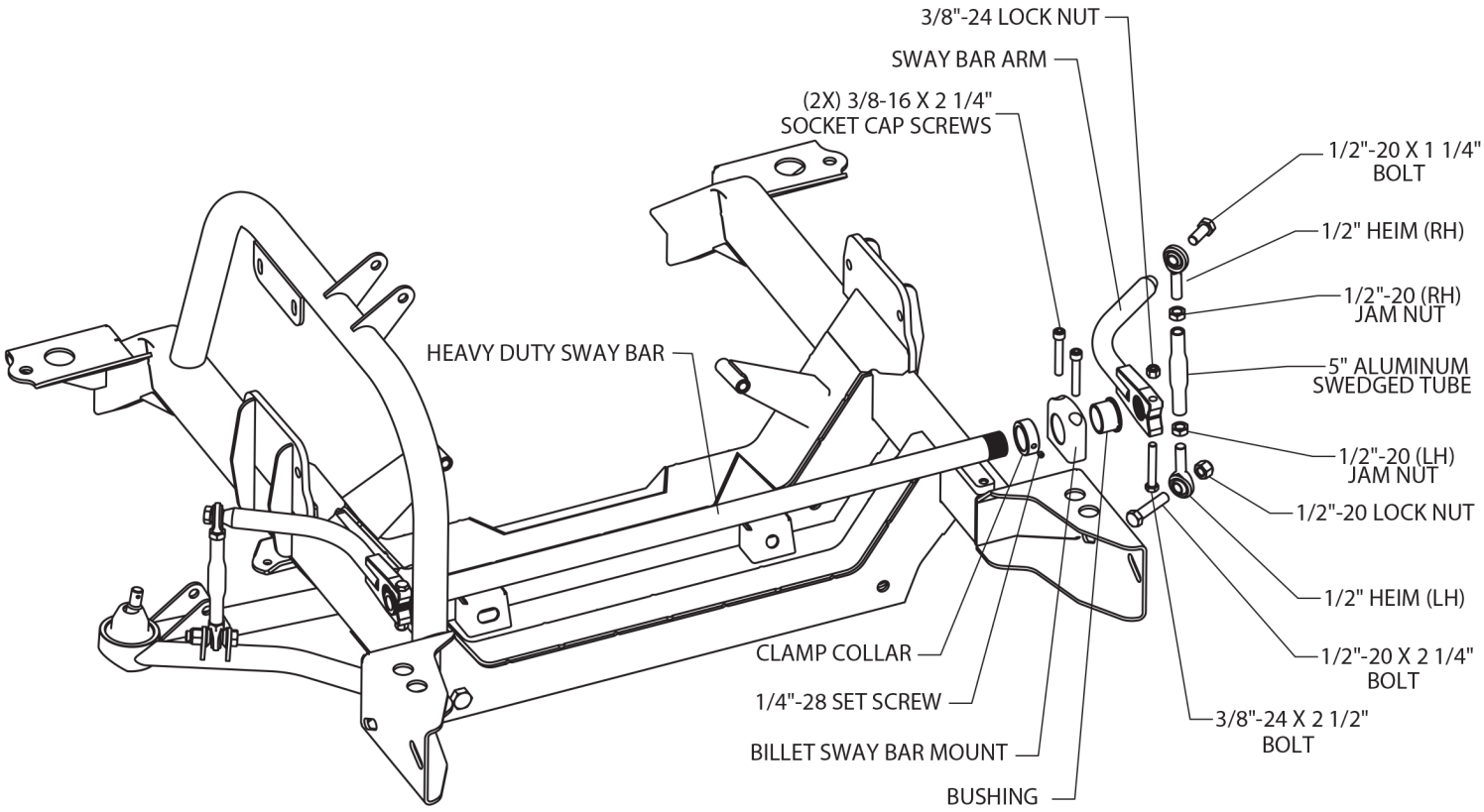

11. Sway bar assembly: Press the bushings into the aluminum pillow blocks and install the pillow blocks to the front crossmember with the bushing shoulder to the inside. Use the four 3/8"-16 x 2-1/4" socket head cap screws to secure the pillow block to the subframe. Before fully tightening the bolts, slide the sway bar through the bushings, installing the two clamp collars to the inside of both pillow blocks. Now, tighten the 3/8" socket cap screws. Center the sway bar between the pillow blocks. Slide one clamp collar up against the bushing shoulder in the pillow block and tighten the set screw. Slide the second clamp collar up to the opposite bushing in the pillow block leaving about .075" of side clearance between the clamp collar and the bushing. Tighten the set screw. **NOTE:** A nickel is about .075" thick and can be used as a spacer between the clamp collar and the bushing to provide the proper side clearance. Slide the sway bar arms onto the splined ends of the sway bar aligning them flush with the end of the bar. Make sure they are parallel or "clocked" to one another then tighten the 3/8"-24 x 2-1/2" pinch bolts and lock nuts. Assemble the sway bar links as shown, leaving roughly 1/4" of threads showing on either heim joint. Use the 1/2"-20 x 1-1/4" bolts to secure the sway bar link to the sway bar arm. Mount one of the lower links into the bracket on the lower control arm using a 1/2"-20 x 2-1/4" bolt and secure it with the 1/2"-20 lock nut. Leave the bolt out of the lower link on one side at this time. The second bolt/nut will be installed after the ride height is set and the car is setting on level ground. This will ensure that there is no preload on the sway bar at ride height.

12. Install the brake kit to the spindle per the instructions included with your brake kit. **NOTE:** For recommended part numbers please visit our website or contact one of our tech expert

© 2025, Speedway Motors, Inc.

13. Align the subframe: Before installing the front sheet metal, you must first make sure the subframe is aligned with the body. Start by setting the toe to zero and making sure the tires are perfectly straight. **NOTE:** This is easily accomplished with the tires removed and a 2′-3′ long piece of angle iron clamped to each brake rotor. Measure the distance between two pieces, both in the front, and in the rear. Adjust the tie rod length until the distance is the same. Now measure the wheel base on both sides of the car. If they are different, you must loosen the body bolts and slightly adjust the subframe as needed.

14. Install the engine and transmission. The G-Comp sub-frame was designed to use stock type GM motor mounts (910-18012) or Speedway's Prothane mounts (910-18015).

15. Install the core support, radiator, grill, and fenders. All accessories and other components can now be installed.

16. Alignment. The lower control arms should be level with all the weight on the car. To adjust the ride height, take the weight off the suspension and turn the threaded adjusters on the bottom of the coil over shocks. Turning the adjusters clockwise will raise the ride height. Once the ride height has been set, place the car back down on level ground. Adjust the free heim end on the sway bar link so that it lines up with the bracket in the lower control arm. Keep adjusting the heim end until the remaining 1/2"-20 x 2-1/4" bolt will slide through easily and secure it with the 1/2"-20 lock nut.

Set the alignment to the following initial settings:

Caster = 5°
Camber = negative .25°-.5°
Toe In = 0" - 1/8" Toe Out

17. Caster adjustments are made by changing the caster inserts. The caster inserts are identified with numbers indicating the distance of the hole from the center of the insert in 1/8" increments.

#1 = 1/8" #2 = 1/4" #3 = 3/8"

The inserts can be reversed to move the hole in front of or behind center for a total range of ¾".

18. Camber is adjusted using the included A-arm shim plates. Additional shim plates can be purchased separately if desired under Speedway Part # 917-21005. These are available in thicknesses ranging from 1/8" to 1/2".