INSTRUCTIONS

© 2024, Speedway Motors, Inc.

350-810 - Unser Rear Suspension, 1967-69 Camaro

Kit Contents	
Qty	**Description**
350-810.1	G-Comp Rear Crossmember Assembly
350-810.2	G-Comp Main Crossmember
350-800.1	G-Comp 58" Rear End Housing - Camaro
350-400.1	Chevy II Unser Rear Arms (pair)
350-810.3	G-Comp Rear Watts Link Package
350-029.2	Floater Components
350-800.4	Hardware Kit Unser Rear - Camaro
655-79031-27.5	27.5" Double Splined Axle - 31
655-79031-32	32" Double Splined Axle - 31
350-402	G-Comp Rear Sway Bar

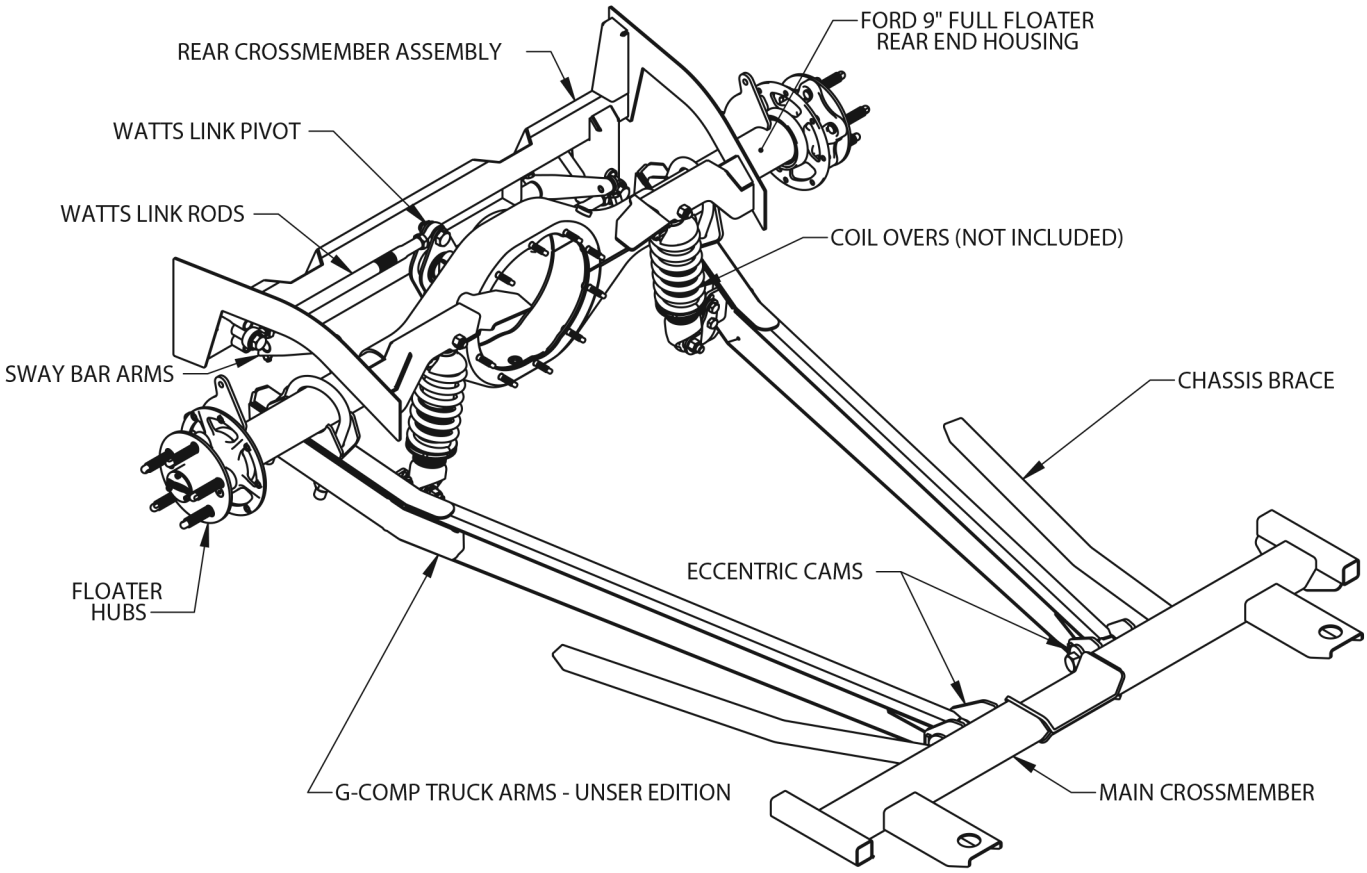

Note: This kit will require modifications to the rear floor pans to clear truck arms.

INSTRUCTIONS

© 2024, Speedway Motors, Inc.

1. Remove Rear Suspension: Raise the car and support it with jack stands or a lift. Remove the exhaust, drive shaft, rear end and all rear suspension components including the rubber bump stops. Disconnect fuel lines and remove fuel tank. Remove fuel lines, brake lines, and E-brake cables from bottom of car. These can be re-routed through the holes in the main crossmember after installation.

2. Prep for Welding: Raise the main crossmember into its approximate position and mark all areas that will be welded. These areas should be ground down to bare metal to provide the proper conditions for welding. **Any carpet or padding installed on back side of weld areas should be removed at this time.** The main crossmember should be centered in the car and set between the rockers. Bolt the front mounts into the rear subframe holes and butt the crossmember against them, ensuring it remains centered in the car and perpendicular to its centerline. Minor trimming may be required. The chassis braces will weld to the main crossmember as well as the floor and factory rear frame rails.

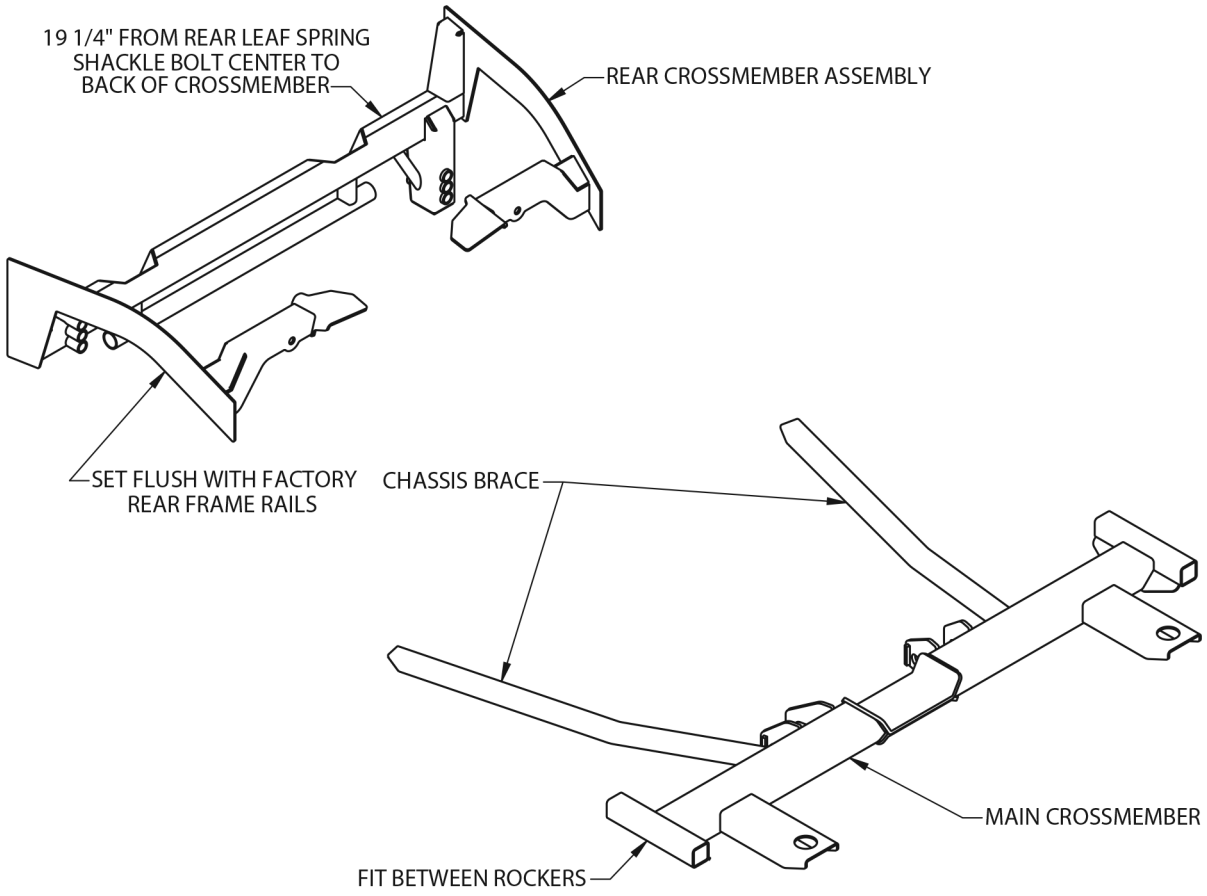

3. Repeat step two with the rear crossmember assembly. Depending on the car, minor trimming/fitting may be required. The rear crossmember assembly will sit between the factory rear frame rails and sit against the floor of the car. The rails should be flush with the outer plates of the assembly and the rear crossmember should be 19-1/4" from the factory rear leaf spring shackle bolts.

© 2024, Speedway Motors, Inc.

4. Tack-Weld Crossmembers: Once all areas that will be welded have been prepped and cleaned – the main and rear crossmembers can be tack welded into place. (Some grinding and trimming may be necessary to provide proper fit up.) **NOTE:** Do not fully weld the crossmembers at this time! Only weld enough to securely hold the parts in place during mock up. It is helpful to only weld in places that can be easily accessed with a grinder in case it becomes necessary to move or adjust the parts.

5. Assemble Truck Arms and Rear End Housing:
Install the truck arms onto the front cross member using the supplied 3/4"-16 X 5-1/2" cam bolts and spacers.

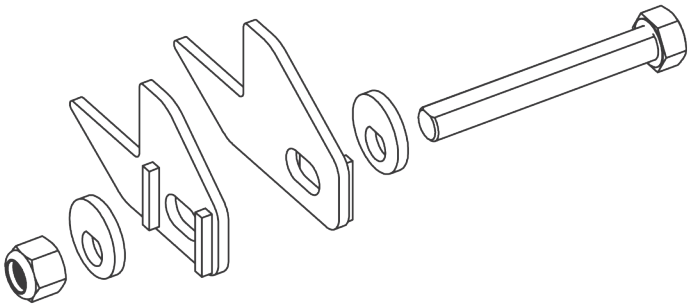

Note: Install the cam bolts in the center of adjustment as shown. The flat side of the bolt should be facing upwards. Tighten the nut until it just touches the cam spacer, but do not fully tighten it yet. Position the rear end housing below its approximate location and using the supplied U-bolts and nuts, attach the truck arms to the rear end housing making sure it's centered. The U-bolts only need to be snug at this time; there is no need to fully tighten them yet. Raise the housing until the truck arms begin to contact the floor and mark the position of the truck arms on each side. Remove the housing and rotate the arms out of the way. Clearance the floor only enough to raise the housing and truck arms into their approximate position at ride height. **DO NOT** patch the channels cut yet, this will be done later after full mock up of assembly. Reinstall the rear end and tighten the cam bolts with everything at ride height

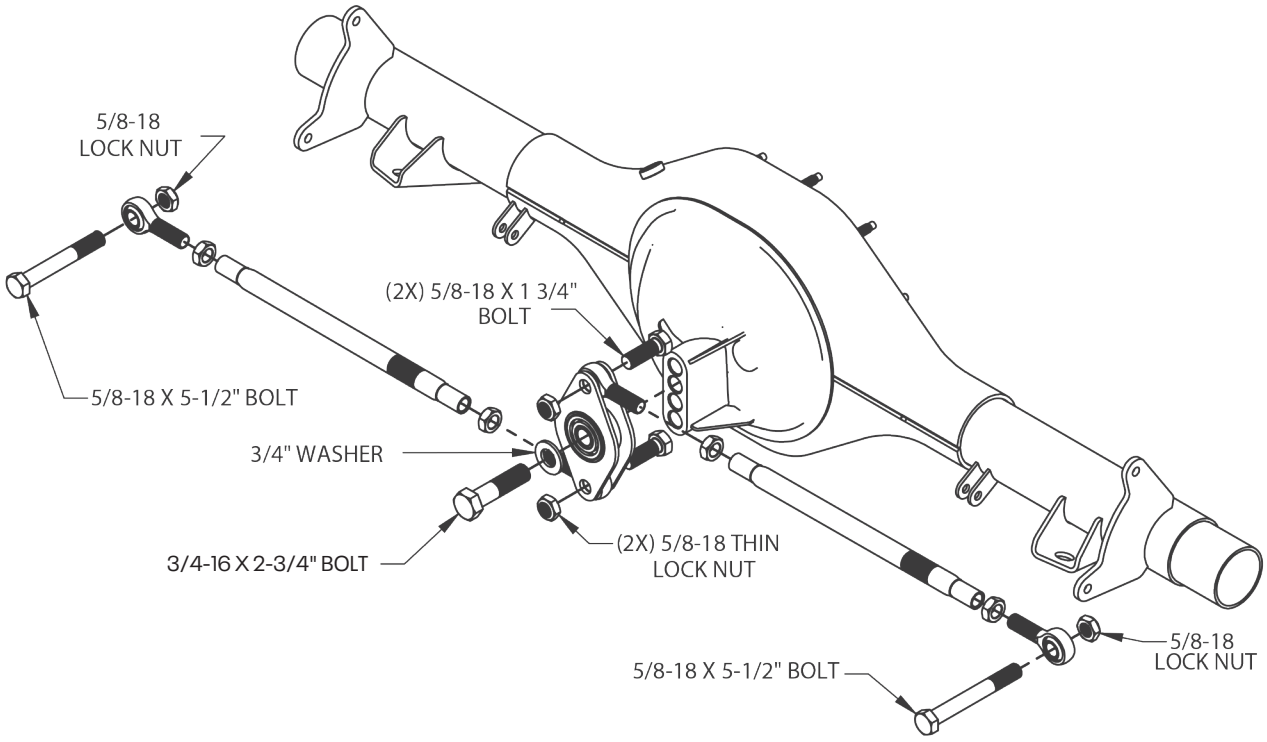

© 2024, Speedway Motors, Inc.

6. Install the Watts Link Pivot: Once the truck arms have been connected to the rear end housing, it's time to mock up the watts link. Start by installing the center pivot to the rear end housing. Use the supplied 3/4-16 X 2-3/4" bolt and washer to attach the pivot to the housing as shown. For initial mock up, use the second hole from the top on the rear end housing.

7. Install the Link Rods: Start by centering the rear end housing in the car. Then install the lower/drivers side link rod first, as shown. Once the link is installed, adjust the length of the link by spinning the tube until the pivot is at a 90° angle with the ground. Note: The link should be level with the ground at this time. The rear end housing may need to be raised or lowered to achieve this. Once the link is level with the ground, and the pivot is at a 90° angle, the jam nuts can be tightened. With the first link installed, it is now time to install the upper/passenger side link. Be sure to keep the rod ends adjusted evenly on either side of the tube. **Note:** The center pivot bolts must be installed as shown, with the nut towards the rear of the car. Installing them in the other direction may result in interference between the bolt and the rear end housing. With the links adjusted properly and the rear end at ride height, both links should be parallel to the ground and the pivot should be at a 90° angle.

8. Check Alignment and Clearances: Cycle the suspension completely through its full range of travel and clearance any remaining items. This may involve trimming slightly more from the previously cut areas. Once you have ensured the suspension moves freely you can begin to patch the clearanced areas. A 3.5 inch wide U-channel will suffice and should be trimmed to follow the floor contour.

Shown below is the clearanced floor pan on the Team Speedway '70 Camaro. Note: the floor pan was over clearanced as part of our R&D effort. The U-channels can be much narrower on the production Unser system.

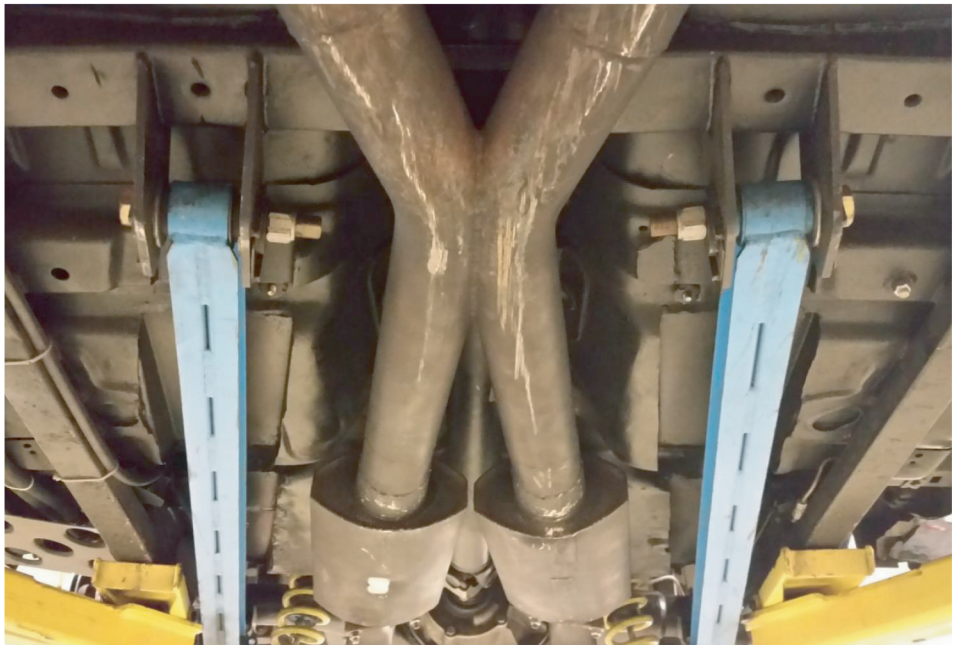

© 2024, Speedway Motors, Inc.

9. Weld: If there are no clearance issues, it is time to fully weld in the crossmembers. Start by removing the rear end, watts link, and truck arms from the car. Take note which link rod goes on which side. Fully weld the cross members and chassis braces to the car. **NOTE:** It is a good idea to only weld a small bead at a time, then move to a new area and allow the first area to cool completely before welding further in that area. This will greatly reduce the risk of warping.

10. Final-Assembly: Once all of the welding is complete, the suspension can be assembled.

11. Now is a good time to fully assemble the rear end by installing gears, hubs, axles, and brakes.

NOTE: This can also be done after installing the housing into the car. Assemble the hub as shown below. Be sure to pack the wheel bearings with high quality grease. **Do not over torque the axle nut!** The hub should spin freely with zero endplay. To achieve this, assemble the hub as shown. Tighten the axle nut and spin the hub a dozen or so rotations. Now back the axle nut off 2 full turns. Then tighten the axle nut until it just starts to get snug. At this point the hub should spin freely with little to no resistance and there should be no endplay in the bearing. Bend the tab on the lock ring into the groove on the axle nut; this will prevent the axle nut from loosening. **After driving 100 miles, recheck the end play and tighten the axle nut as required.**

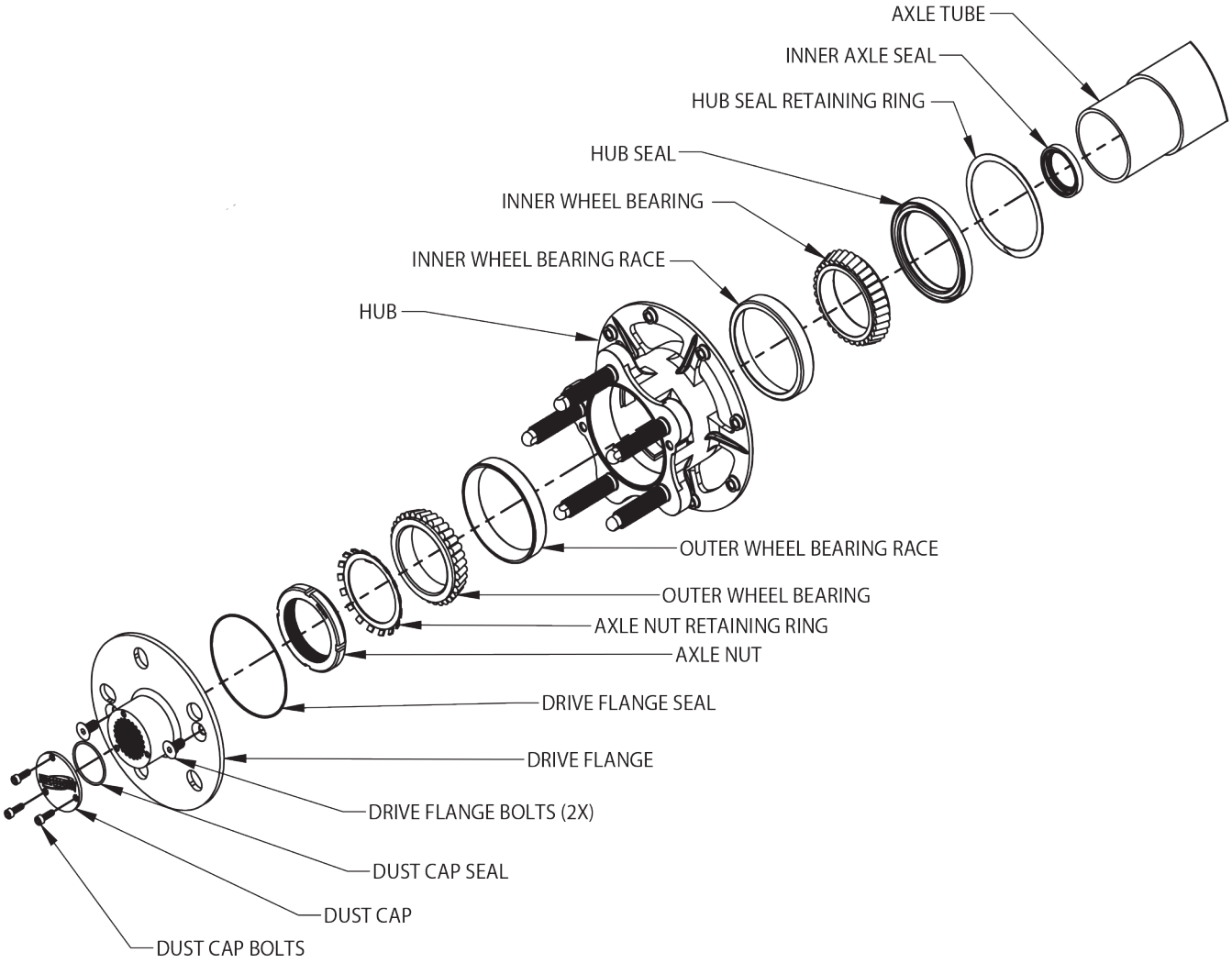

© 2024, Speedway Motors, Inc.

12. Secure the truck arms to the chassis brace using the cam bolts and cam spacers as shown in step 5.

13. Raise the complete rear end into position. Attach the rear end to the truck arms using the supplied u-bolts, washers, and nuts.

14. Install the Watts link center pivot as described in step 6 and tighten the 3/4"-16 x 3" bolt.

15. Install the link rods back into their previous locations and tighten all four 5/8"-18 lock nuts.

16. Install the sway bar as shown. Press the sway bar bushings into the sway bar housing on the crossmember by lightly tapping them into place with a rubber mallet (be sure the bushings are going in straight). With the bushings in place, slide the sway bar into the housing. Slide one of the torsion arms onto the splined portion of the sway bar so it sits flush with the end of the bar. Install the 5/16"-24 x 2" bolt and lock nut onto the arm and tighten. Install one of the male rod ends onto the outside of the arm using a 3/8"-16 x 1-1/4" bolt. Now thread the jam nut and female rod end onto the male rod end leaving roughly 1/4" of threads showing. Attach the female rod end to the rear end housing using 3/8"-24 x 1-1/4" bolt and lock nut. Assemble the opposite side in the same manner. The arms need to be "clocked" about 45° relative to one another for clearance with the watts link rods. Assemble with the passenger side at a downward slope and the driver side at an upward slope. **NOTE:** Once the vehicle is fully assembled and sitting on level ground, it is a good idea to disconnect one side of the sway bar links and adjust the length of the rod ends until there is no preload and the holes line up perfectly.

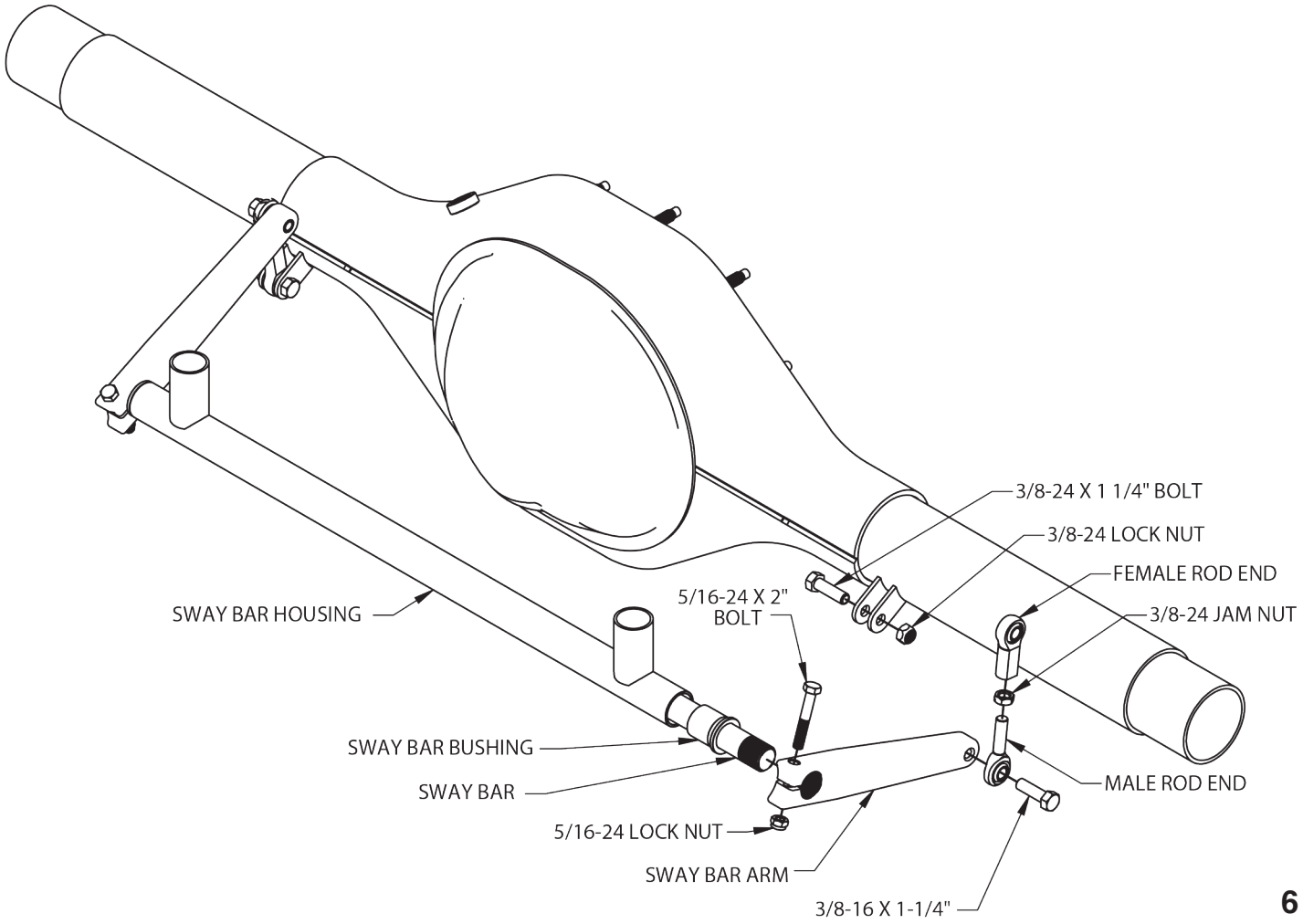

© 2024, Speedway Motors, Inc.

17. Install the brakes as per the instructions included with your brake kit. **Note:** For recommended part numbers please visit our website or contact one of our tech experts.

18. Install the coil-over shocks. The Unser Edition G-Comp rear suspension features an adjustable lower shock mount. To install the shock, first use the two 7/16"- 20 x 1-1/4" bolts and lock nuts to install the shock brackets to the shock mount on the truck arm. Then use a 1/2"-20 x 2-1/4" bolt and lock nut to secure the lower end of the shock to the truck arm as shown. The remaining 1/2"-20 x 3" bolts and lock nuts are used along with two 5/16" spacers to install the top of the shocks into the rear crossmember. Tighten both shock bolts. **NOTE:** This kit is design to use 4" stroke shocks with a compressed length of 10"-11" and an extended length of 14"-15". Shock ends should be 1/2" bearings with a mounting width of 1". For recommended part numbers, please visit our website or contact one of our tech experts.

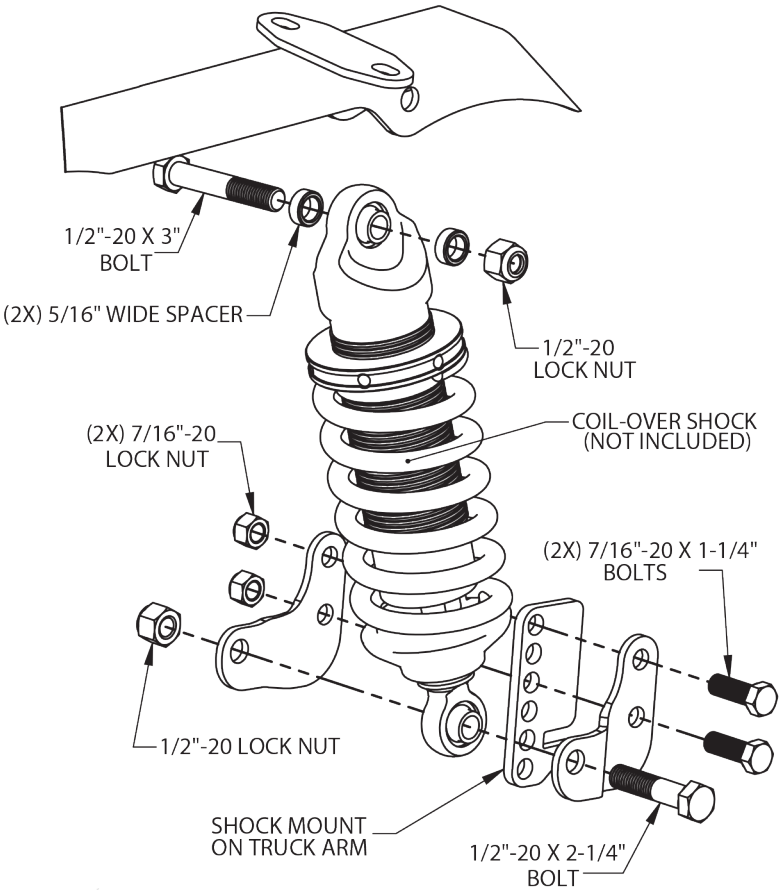

19. Re-install the drive shaft, fuel tank, fuel lines, brake lines, exhaust, etc... Bleed the brakes. Fill the rear end with fluid. Install wheels and tires.

20. Alignment: Lower the car onto the ground and check for desired ride height. Adjust ride height if necessary by raising the car and spinning the adjusting collar on the coil-over. Once the ride height has been set, lower the car onto the ground and make sure the rear end is centered in the car body. Adjust the watts link rods if necessary. For optimum handling and performance, both rods should be parallel with the ground and the center pivot should be at a 90° angle. This kit provides multiple mounting locations for the watts link to allow for different ride heights. Now that the ride height is set and the rear end is centered perfectly in the car, the rear end can be aligned by adjusting the cam bolts on the front of the truck arms. **NOTE:** This is difficult to do accurately and a professional alignment is recommended. This method is intended to get you close enough to drive the car to an alignment shop.