HDX

Analog / Digital Instrument System

INSTALLATION AND OPERATION MANUAL

Please read this before beginning installation or wiring.

<u>IMPORTANT NOTE!</u> This system has an odometer preset option that is only available for the first 100 miles of operation. See odometer preset section (pg 28) for instructions and setup information.

Phone (605) 332-6513
dakotasupport@dakotadigital.com

Thank you for purchasing an HDX system from DAKOTA DIGITAL. Representing the latest electronic dashboard technology for the street rodder, car, and truck enthusiast alike, the HDX system combines modern digital electronics with a traditional look to give the driver up-to-date and accurate information on the operation of his or her vehicle. Fully lit color needles, backlit color faces, and highly visible color TFT message centers are a few features that make the HDX lineup stand out from other aftermarket instrumentation. The HDX system boasts excellent daytime visibility and while under computer control, fully backlit and dimmable for nighttime driving. Monitoring solid state sensors with microprocessor technology and driving precision stepper motors, the HDX dashboard gives the driver unparalleled accuracy. User-customizable display feedback and additional features not typically found on any other brand or type of instrumentation are standard in the HDX system. Digital accuracy and solid state reliability will give you, the driver, quality service for miles down the road that includes a limited lifetime warranty on a product engineered and manufactured in the USA!

HDX INSTRUMENT SYSTEM FEATURES

Digital Full Color TFT displays

- Each of the six analog gauges can be displayed here as well as additional functions listed below.

Mileage readings

- Million mile odometer
- Two (A/B) re-settable trip mileage (0-9999.9)
- Re-settable service mileage (0-9999 countdown)
- Range (fuel) to empty

Performance readings

- High speed recall. This can be manually reset during normal operation.
- High RPM recall. This can be manually reset during normal operation.
- 0-60 MPH (0-100 km/h) time. This can be manually reset during normal operation.
- ¼ mile time and end speed (trap speed). This can manually reset during normal operation.
- 1/8 mile time and end speed (trap speed). This can manually reset during normal operation.

Hour meter

- Resettable hours (0-999.9)

English/metric conversion

- Alternate speed and temperature can be displayed in TFT display.

Built-in Indicators

- Red warning indicators built into the Fuel, Volt, Water, Oil, and Tach gauges.
- Left/Right Turn signal indicators
- High Beam indicator
- Check Engine indicator
- Brake warning indicator
- 4x4 indicator
- Wait to Start indicator
- Cruise Control indicator
- Gear position indicator with use of Dakota Digital **GSS universal gear shift unit** (purchased separately)
- Two extra indicator inputs with programmable labels.

Special outputs

- RPM shift output to activate external light
- Selectable 2000ppm or 4000ppm speed output for cruise or ECM
- Buffered tachometer output for cruise control
- Warning output that can be programmed to activate when one or more of the gauges are out of range. This output can also be used to activate reverse lights when using a GSS-3000 or BIM-01.

Demonstration mode

- Available from the setup menu, this will start the system going through a preset sequence of readings. To exit the demo mode, turn the key off or hold both switches. You may also wire up a separate switch to power the gauges for demo mode without powering the entire vehicle.

Auxiliary gauge readings in TFT message displays with expansion bus interface modules (**BIM**)

TYPICAL HDX TFT DISPLAY LAYOUTS

Home Screen

Group Screen

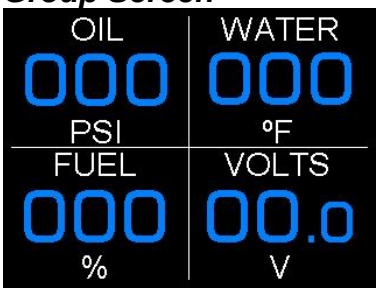

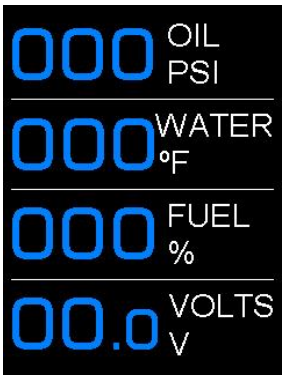

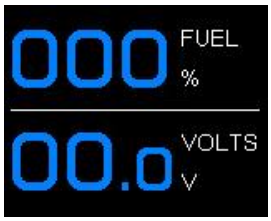

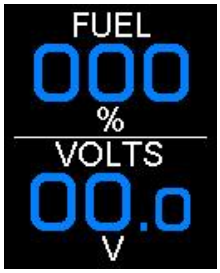

Indicators:

LEFT TURN	CHECK ENGINE	HIGH BEAM	CRUISE ENGAGED	PARKING BRAKE	RIGHT TURN
GREEN	RED	BLUE	GREEN	RED	GREEN

WARNING

These are precision instruments and must be handled with care. Do not disassemble gauges.

CARE AND CLEANING

Never open the system or attempt to remove the needles as the calibration of the instrument system could be thrown off. All systems are calibrated and tested before they leave Dakota Digital.

The clear lens on the front of the HDX system can be cleaned with a mild soap and water solution or common glass cleaners. Use a soft cloth such as a micro-fiber for wiping the lens clean.

MOUNTING SYSTEMS

Most HDX systems and kits will come with a separate instruction sheet with mounting details. Follow this sheet for mounting the actual display system in the dash, and then refer to this manual for wiring and operation instructions.

CONTROL BOX MOUNTING

Once the display panel is in place, mount the control box within reach of the supplied display cable (approximately three (3) feet). Choose a mounting location that will allow you access to wire all of the inputs on either side of the control box. Double sided tape, hook and loop fasteners or screws in the two tabs on the case work fine for securing the control box under the dash.

When selecting a mounting location, avoid placing the control module next to or just opposite of the firewall from ignition components, ie: Ignition coil, HEI, etc. Ignition components can emit tremendous amounts of electrical noise, affecting the operation of electrical components which can cause erratic operation. Avoid mounting the control box where it may get wet.

BUZZER MOUNTING

The buzzer plugs into the back of the display panel and has a three (3) foot cable. The buzzer should be mounted under the dash. It can be mounted near the control box or in another location that will not obstruct the sound. Double sided tape, hook and loop fasteners or screws can be used to secure the buzzer. Avoid mounting the buzzer where it may get wet.

WIRING

While the control box contains several connections, the wiring is straightforward. Depending on how many auxiliary functions you want displayed, not every terminal will be used in most applications. On the pages that follow, we describe the function of each terminal, what they do, and how to wire them.

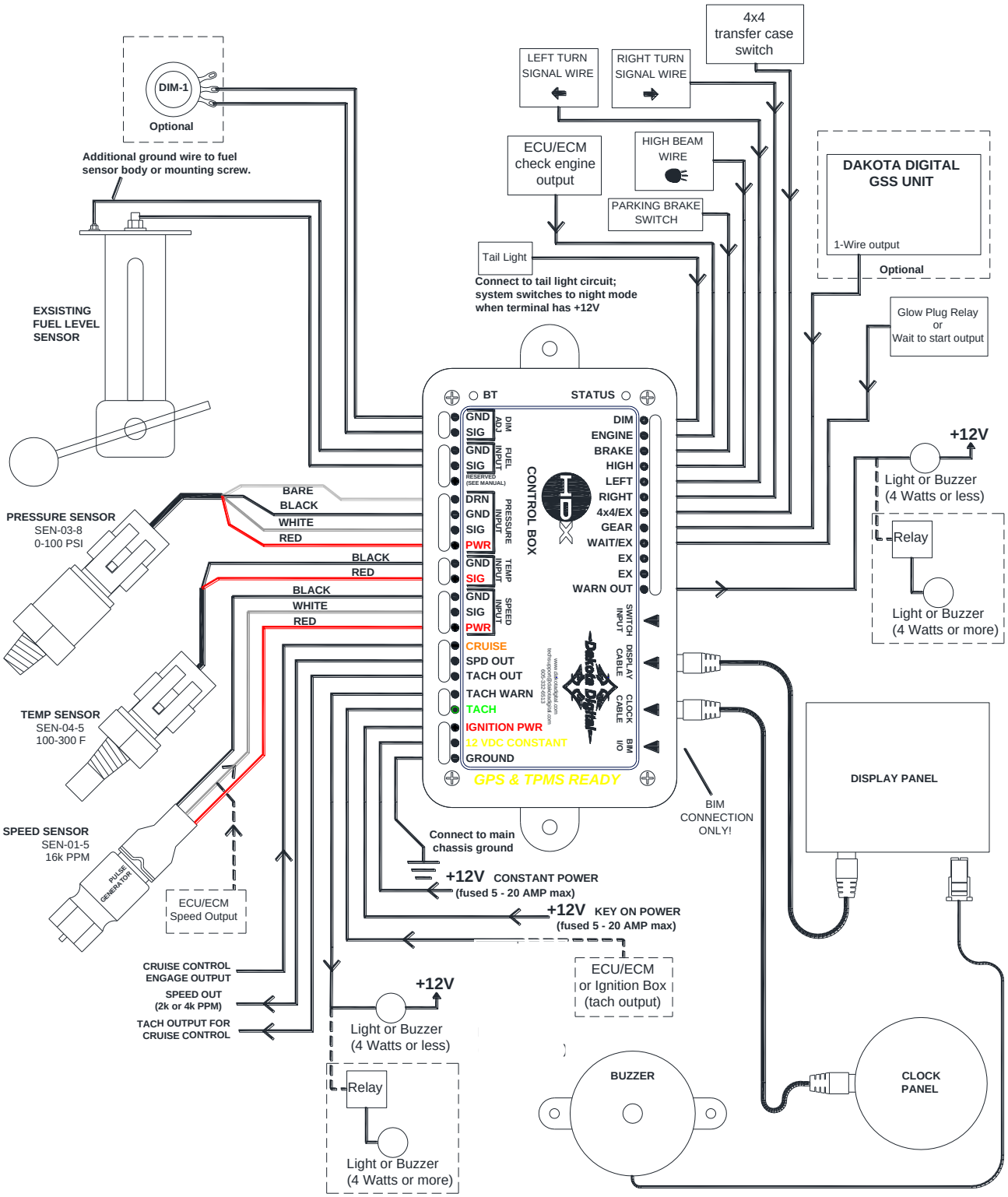

TERMINAL DESCRIPTIONS

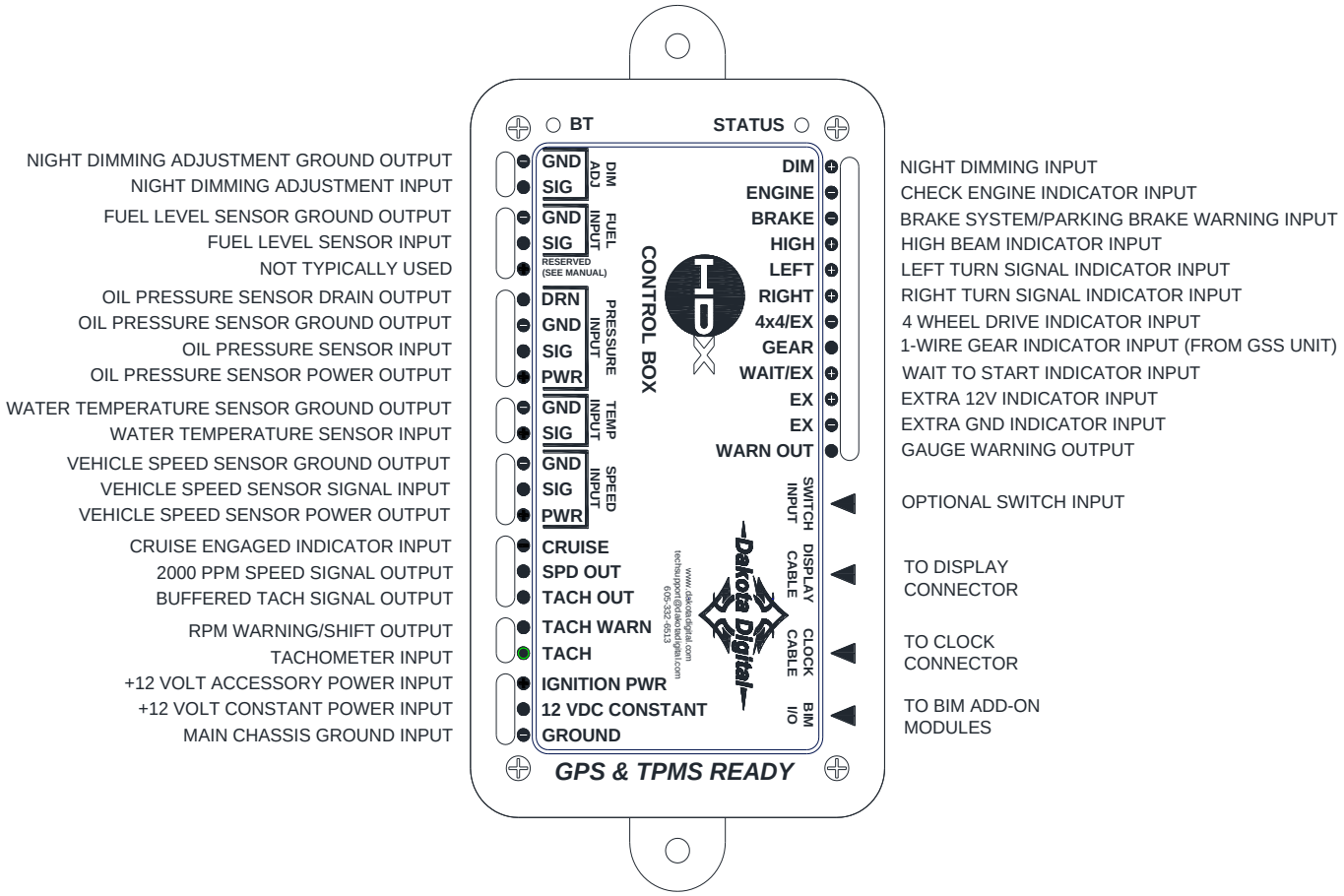

STATUS LED

This LED is located at the corner of the control box, near the DIM terminal. The LED is used for diagnostics and for a quick visual check if power is present.

- A steady green flash indicates the system is powered and operating normally.
- An alternating red and yellow flash indicates the system is in setup mode.
- A steady red light indicates that the system is in DEMO mode.
- A short red flash once every four seconds indicates the 12 VDC CONSTANT terminal is powered and the system is in stand-by mode.
- A steady yellow or yellow-red-green flash indicates there is no display panel detected.
- Not flashing or lighting indicates loss of power or ground.

BT LED

This LED is located at the corner of the control box, near the sensor connections. The LED is used for checking the Bluetooth module status.

- A single blue flash indicates the module is in standby waiting to connect to a device.
- Two blue flashes indicates the module is currently connected to a device.
- No light indicates the Bluetooth module is powered down.

CLOCK CABLE CONNECTION

This is where the 6 pin cable from an optional clock plugs into the control box.

DISPLAY CABLE CONNECTION

This is where the 8 pin cable from the display system plugs into the control box.

GROUND

This is the main ground for the display system. A wire should be run from this terminal to the vehicle's main chassis ground. Use 18 AWG or larger wire to ensure sufficient grounding.

Proper vehicle grounding is extremely important for any gauge (or electronics) to operate correctly. The engine block should have heavy ground cables to the battery, frame, firewall, and body. ***Failure to properly ground the engine block or the control box can cause incorrect or erratic operation.***

12 VDC CONSTANT

Connect the 12 VDC CONSTANT terminal to a +12V power from the fuse panel that is "hot" all of the time, or a fused wire (5-20 amp) direct to battery power. This terminal should have power all of the time. The constant +12V supply source should be a fused 5 - 20 amp circuit, the system draws less than 1 amp, so sharing an existing constant power circuit will generally be fine. Use 18 AWG wire to ensure the system receives a sufficient power feed. This terminal keeps the clock memory as well as returning the needles to zero when the system is shut off.

IGNITION PWR

Connect the IGNITION PWR terminal to accessory +12V power from the fuse panel or vehicle wiring harness. This terminal should have power when the key is on or in the 'accessory' position. In addition to turning on the display system, this is also where the voltmeter gauge senses the vehicle electrical system voltage. The accessory +12V supply source should be a fused 5 - 20 amp circuit, the system draws less than 1 amp, so sharing an existing accessory circuit will generally be fine. Use 18 AWG wire to ensure the system receives a sufficient power feed.

****** Never connect any power terminal to a battery charger alone. The system needs to have a 12 volt battery connected to it. Battery chargers have an unregulated voltage output that will cause the system to not operate properly and may cause damage to the control box.***

TACH

Connect the TACH terminal to the ignition system.

- On vehicles using a separate ignition coil, connect to the negative side of the coil. The negative side of the coil will be the wire that goes to the points or electronic ignition module.
- For GM HEI ignition equipped engines, connect to the terminal marked "TACH" or on some systems, a single white wire with a spade terminal on it.
- On some aftermarket ignition systems, connect to the TACH output terminal.
- On computer controlled ignition systems, consult a service manual for the wire color and location.
- With a magneto system, connect to the kill wire for the tach signal.
- If using a **BIM-01-x** module for the tach reading nothing will connect to this terminal.

To ensure that the ignition system does not interfere with any other dashboard functions, do not run the tachometer wire alongside any other sensor or input wires. **DO NOT USE SOLID CORE SPARK PLUG WIRES WITH THIS DASHBOARD SYSTEM**. Solid core ignition wires cause a large amount of electromagnetic and radio frequency interference which can disrupt the system operation. ***Do not connect the TACH terminal to the secondary, or high voltage, side of the ignition coil.***

The tachometer is compatible with almost all gasoline engines. The engine cylinder selection, display update rate, tach signal type, and RPM warning point can be adjusted in the setup menu under "TACH". If a diesel engine is being used, you will need a tach interface such as Dakota Digital's **DSL-1E** or **DSL-2E**. Be aware of the cylinder setting when using computer outputs or reading the tach signal from an ECU. Some GM LS-based engines require the tach to be set up for a 4 cylinder, low voltage signal when reading from the ECU even though it is a V8 engine.

TACH WARN

The TACH WARN terminal is an output to activate a small light or relay for a red-line or shift indicator. The output is ground-activated when the preset warn RPM limit is exceeded. This output can turn on a 4 Watt or smaller 12V bulb or can activate a relay to turn on a larger bulb or buzzer. To wire a warning light to this output, connect one wire from the bulb to 12 volt accessory power and connect the other wire to the TACH WARN terminal.

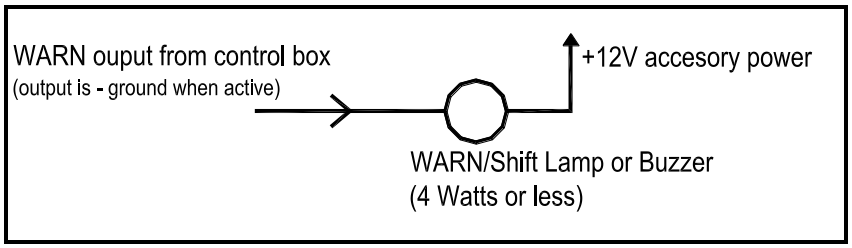

If you need the warn output to be "active high" or provide a +12V voltage to power something larger than 4 Watt, a standard 12V relay such as Dakota Digital RLY-1 can be used to accomplish this.

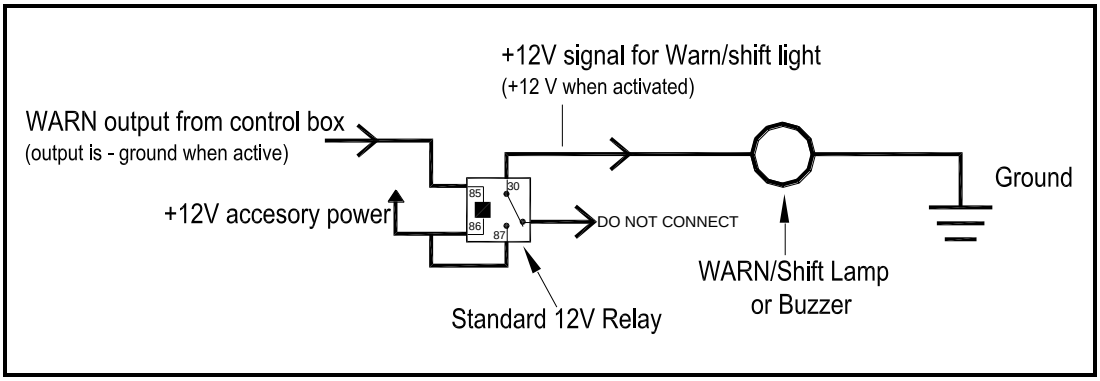

TACH OUT

This terminal can be used to supply a buffered tach signal to auxiliary devices such as a cruise control.

******If you are using the bus tach signal option, with the output from a BIM-01-X module, this output will NOT work.***

SPD OUT

This terminal can be used to supply a speed signal to auxiliary devices such as a cruise control or radio volume adjustment. The output is scaled to the input speed signal coming into the SPEED INPUT - SIG terminal. It can be set to 2,000 PPM or 4,000 PPM.

******If you are using the bus speed signal option, with the output from a BIM-01-X module, this output will NOT work.***

CRUISE (-)

The CRUISE terminal can be used as a "cruise engaged" indicator. The CRUISE input is activated by a ground signal from a compatible cruise control harness. Whenever the CRUISE input is grounded, the system will display a small green "cruise engaged" indicator.

SPEED INPUT - PWR

This terminal is used to supply power to Dakota Digital speed sensor **SEN-01-5**. This supplies 5V DC to the sensor and should not be hooked up to anything else. Connect the red wire from the **SEN-01-5** to this terminal.

If you are using a 1-wire VSS output from a computer or a two wire pulse generator this terminal should be left open.

******DO NOT use this terminal to power any other devices; it is a low current +5V output.***

SPEED INPUT - SIG

This is where the vehicle speed sensor (VSS) connects. The signal supplied to this terminal will be used by the control box to calculate the speed reading on the display and also for calculating and saving odometer mileage. If a **BIM-01-x** module is used to obtain the speedometer reading then this terminal will not be connected.

Dakota Digital supplies a 3-wire sensor for most of its kits, **SEN-01-5**. If you are using this sensor, the white wire is the speed signal; connect to SPEED INPUT - SIG. The red and black wires in the cable are power and ground (5V DC) and their connection is discussed in the SPEED INPUT –PWR and –GND sections.

For two wire speed sensors such as a cable driven pulse generator, the polarity of the wires does not matter. Connect one wire to the SPEED INPUT - GND and the other to the SPEED INPUT - SIG terminal. The speed sensor ground wire should be brought back to the control box to ensure a proper signal is received. Twisting the ground and signal wires around each other provides an additional level of interference protection. The speed signal wire should not be routed alongside tach, ignition, or other high current or high voltage wires.

For vehicles which have a vehicle speed signal from a transmission sensor or ECM, tap into the VSS wire and connect it to the SIG terminal. Consult a vehicle service manual or wiring diagram to determine wire color and location.

This system can accept 2,000 ppm – 250,000 ppm speed signals. The speedometer is fully adjustable and calibration is discussed in a later section. The TFT display will display “PLEASE CALIBRATE SPEED” until the speedometer has been calibrated.

******Failure to calibrate the speedometer may cause your odometer mileage to increase very rapidly if the speedometer is reading too fast.***

****** The speed signal wire should NOT be routed alongside ignition or other high current/voltage wires.***

SPEED INPUT - GND

This terminal is used for speed sensor ground. Connect the black wire from the **SEN-01-5** here. This insures a proper ground as well as providing proper hook-up for a twisted pair of wires, or a solid state sensor. Only ground the speed sensor here. If you are using a single wire output from a computer for the VSS then this terminal should be left open.

TEMP INPUT - SIG

The water temperature sensor included with this system must be used. Other sensors will cause incorrect readings or damage to the control box. If using a BIM-01-x module to obtain engine temperature then this terminal will not be connected.

The supplied sensor, Dakota Digital **SEN-04-5**, is a 100-300ºF(40-150ºC) temp sensor. The sensor mounts on the engine block or into the intake manifold so that the end of the sensor is in the engine coolant flow. It has 1/8” NPT threads; adaptor bushings may be used to adapt it for various applications.

The water temp sensor has two wires coming from the harness. One wire will connect to the SIG terminal; the other wire will connect to the GND terminal. It does not matter which wire goes into either location.

Due to the construction of the sensor, readings at lower temperatures below 100ºF will be inaccurate. The sensor is designed to be accurate from approximately 100ºF - 300ºF.

If the water temperature rises above an adjustable warning point, a red warning light will turn on and the digital reading will be shown on the TFT display. The default warning point is 250ºF. If "WATER SHORTED" is shown this indicates that the control box is sensing a short to ground or out-of-range error from the sensor or sensor wire. If "WATER OPEN" is shown this indicates that the control box is sensing an open circuit or out-of-range error from the sensor. If either indication remains on the display, inspect the sensor wire for damage, check the routing of the sensor wire, and check that the correct sending unit is connected.

TEMP INPUT - GND

This is the ground reference used for two-wire water temp sensors. This will connect to one of the wires from the Dakota Digital **SEN-04-5**. The other wire will connect to the SIG terminal, and it doesn't matter which wire goes into either location.

PRESSURE INPUT - PWR

This terminal is used to supply power to Dakota Digital pressure sensor **SEN-03-8**. This supplies 5V DC to the sensor and should not be connected to anything else. Connect the red wire from the **SEN-03-8** to this terminal.

******DO NOT use this terminal to power any other devices; it is a low current +5V output*.**

PRESSURE INPUT - SIG

The oil pressure sensor included with this system must be used. Other sensors will cause incorrect readings or damage to the control box. If using a BIM-01-x to obtain engine oil pressure then this terminal will not be connected.

The supplied sensor, Dakota Digital **SEN-03-8**, is a 0-100 psi solid state pressure sensor. The sensor can mount on the engine block or in an oil pressure line off of the block. The sensor has 1/8" NPT threads. Adaptor bushings may be used to adapt it for various applications.

The oil pressure sensor has three wires coming from the harness, plus one bare shield wire. The WHITE wire will connect to the SIG terminal, the RED to PWR (5V DC), the BLACK to GND, and bare shield wire to DRN. Do not route the oil sensor wire alongside a spark plug wire or other high current or high voltage wires. Doing so can cause incorrect or erratic gauge readings.

If the oil pressure drops below an adjustable warning point a red warning light will turn on and the digital reading will be shown on the TFT display. The default warning point is 10 psi. If "OIL FAIL LOW" is shown this indicates that the control box is sensing a short to ground or out-of-range error from the sensor or sensor wire. If "OIL FAIL HIGH" is shown this indicates that the control box is sensing an open circuit or out-of-range error from the sensor. If either indication remains on the display, inspect the sensor wire for damage, check the routing of the sensor wire, check the sending unit grounding, and check that the correct sending unit is connected.

PRESSURE INPUT - GND

This is the ground reference used for three-wire pressure sensor. This will connect to the black wire from the Dakota Digital **SEN-03-8**.

******DO NOT connect this terminal to any other devices***

PRESSURE INPUT - DRN

This is the cable shield for three-wire pressure sensor. This will connect to the bare silver shield wire from the Dakota Digital **SEN-03-8**.

******DO NOT connect this terminal to any other devices***

RESERVED (FUEL INPUT – PWR)

This output is not typically used. It is a low current +12V supply for powering solid state fuel sensors. Currently, it does not have an application for any Dakota Digital fuel level sensors.

******This terminal should not be used with a typical resistive type fuel sensor. For most applications, leave this terminal open. Do not try to power other devices from this terminal or damage to the control box will occur. Do not apply power to this terminal.***

FUEL INPUT - SIG

The fuel gauge sending unit is not normally supplied because the display system can use the existing resistive fuel sending unit that is already in the tank in many cases. Most OEM and aftermarket fuel sending units are compatible with this system. It is also possible to manually program a setting for sensors that are not pre-programmed into the system.

Dakota Digital recommends that you run two wires back to the fuel level sensor to insure proper grounds. Use the FUEL INPUT - GND and FUEL INPUT - SIG terminals and run a twisted pair of wires back to your fuel level sensor. Connect the GND terminal to the fuel level sensor body or a mounting screw to insure the sensor is sufficiently grounded. The other wire is the sensor signal which goes to the SIG terminal.

If your wiring harness already has a single wire routed through the vehicle for the fuel sensor then it may be used. If using a wire from an existing harness, make sure that the wire does not have power. Fuel sensors reference their ground from the sensor mounting plate. Make sure that a ground wire is connected from one of the sensor mounting bolts to the vehicle frame.

The fuel sensor type is selected using the fuel setup menu under “INPUT”. The settings are discussed later in the setup section. Anytime the fuel level is below 10% a red warning light will turn on.

The TFT display will display “PLEASE CALIBRATE FUEL” until the fuel sensor type has been set. If the message display shows “FUEL SHORTED” this indicates that the control box is sensing a short to ground or out-of-range error from the sensor or sensor wire. If the message display shows “FUEL OPEN” this indicates that the control box is sensing an open circuit or out-of-range error from the sensor. If either indication remains on the display, inspect the sensor wire for damage, check the routing of the sensor wire, check the sending unit grounding, and check that the sensor selection is set correctly for the sending unit that is connected.

FUEL INPUT - GND

This terminal is used to provide a ground connection for the fuel level sensor. Dakota Digital recommends that you use the FUEL INPUT - GND terminal and run a twisted pair of wires back to your fuel level sensor. Connect the GND terminal to the fuel level sensor body or a mounting screw to insure the sensor is sufficiently grounded. One terminal on the sensor is the signal which goes to the FUEL INPUT - SIG terminal.

******For fuel level sensors that are attached to an electric fuel pump, or if you have an electric fuel pump in the tank, make sure that the fuel pump is externally grounded to the vehicle chassis. Attempting to ground the fuel pump to the Dakota Digital control box will result in erratic operation and damage to the control box.***

DIM ADJ - SIG

The DIM ADJ - SIG terminal is an optionally used input that allows you to have control over the dimming brightness. By default, the system will turn on the back lights when the DIM terminal has power, +12V, but this level is adjustable in the LIGHTING setup menu. Using the DIM ADJ terminal allows you to have a dash mounted control to vary the brightness while the headlights are on. This requires Dakota Digital's **DIM-1** kit; a stock headlight rheostat will not work.

The DIM-1 has two wires, one connects to the SIG terminal and the other connects to GND. The dash mounted dimmer will only vary the display brightness when the DIM terminal has power, +12V.

DIM ADJ - GND

This terminal provides a ground reference for the optionally installed **DIM-1** for dash mounted dimming control. One wire from the **DIM-1** will connect to the DIM ADJ - SIG terminal, the other connects to the DIM ADJ - GND terminal.

****This terminal should not be used for grounding other sensors or devices or damage to the control box will occur. If not using a Dakota Digital DIM-1, this terminal should be left open. Do not ground this terminal.***

SWITCH INPUT or SW:LEFT (-) & SW:RIGHT (-)

The switch input connector or left/right input terminals are for an optional switch connection that operates the same as the touch switches on the display panel.

When the left button is tapped it changes the display focus within the current display, allowing individual readings to be reset or zeroed. The display focus is shown by arrows alongside the reading on the edge of the TFT screen. When the button is pressed and held for a few seconds any resettable information will be zeroed. When in setup mode this will move up in the menu or decrease the setting.

When the right button is tapped it changes the Group Screen. When the button is pressed and held for a few seconds, any re-settable information displayed will be zeroed. When in setup mode this will move down in the menu or increase the setting.

WARN OUT

The WARN OUT terminal is an output to activate a small light or relay for a gauge warning indicator. It can also be used to activate reverse lights when using a GSS-3000 or BIM-01 when in the REVERSE gear position. The output is ground-activated when any of the activated gauge warnings are exceeded. This output can turn on a 4 Watt or smaller 12V bulb or can activate a relay to turn on a larger bulb or buzzer. To wire a warning light to this output, connect one wire from the bulb to 12 volt accessory power and connect the other wire to the WARN OUT terminal.

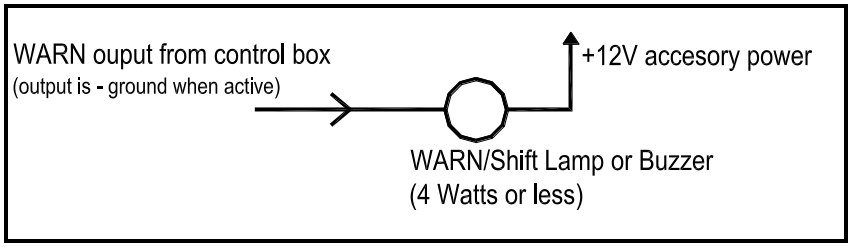

If you need the warn output to be “active high” or provide a +12V voltage to power something larger than 4 Watt, a standard 12V relay can be used to accomplish this.

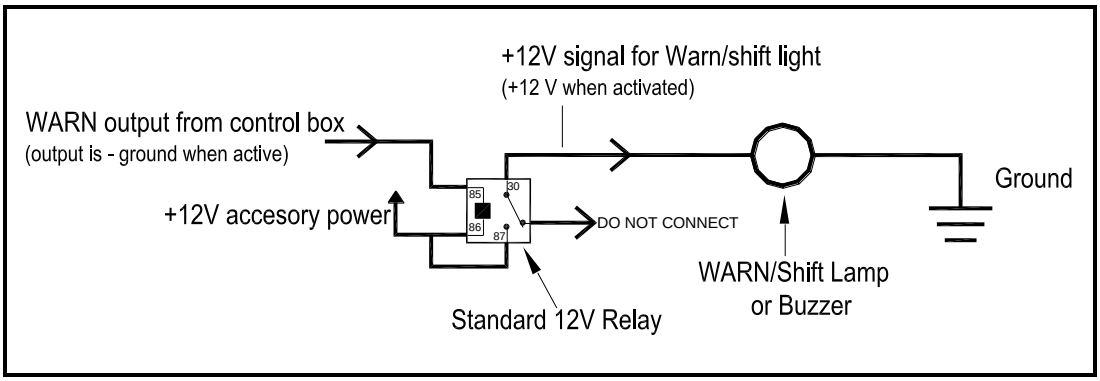

EXTRA (-)

This is an extra indicator input that is activated by grounding. When activated, a custom label is displayed on the TFT. The label can appear temporarily when the state changes or remain displayed while active. The label and operation can be changed in the “EXTRA” setup menu.

EXTRA (+)

This is an extra indicator input that is activated by +12V. When activated, a custom label is displayed on the TFT. The label can appear temporarily when the state changes or remain displayed while active. The label and operation can be changed in the “EXTRA” setup menu.

WAIT (+)

The WAIT terminal can be used as a “wait to start” or glow plug indicator. The WAIT input is activated by a 12 volt signal from the glow plugs. Whenever the WAIT input is powered, +12V, the system will display “WAIT TO START” on the TFT display. This message can be cleared by pressing and holding either switch or once the WAIT terminal loses the +12V signal. With version HX07 and newer this input can also be set with a custom label for other uses.

GEAR (1 wire)

The GEAR terminal is used for the gear shift indicator. The indicator is built into every system, but will not light up unless a Dakota Digital **GSS** gear shift sending unit is connected, telling the system what gear the transmission is in. The gear shift sending unit is not included with the system and must be purchased separately if desired. A **BIM-01-x** may also be able to provide gear indication if the vehicle has a compatible ECM and transmission.

The GEAR terminal will connect to the FIRST terminal on a **GSS-1000** or to the 1-WIRE terminal on a **GSS-2000 and higher**. Follow the instructions in the GSS manual for use with a single wire display system. When the gear shift sending unit is connected the gear indicator will be shown on the Home Screen. If a different Group Screen is being shown the gear position will light up temporarily any time the gear position changes.

4x4 (-)

The 4x4 terminal can be used on four wheel drive vehicles. The 4x4 input is activated by a ground signal from a switch on the transfer case. Connect a wire from this terminal to the switch on the transfer case. Whenever the 4x4 input is grounded a green 4x4 indicator will be shown on the Home Screen of the TFT display. If a different Group Screen is being shown “4x4” will be shown in the information area. With version HX07 and newer this input can also be set with a custom label for other uses.

RIGHT (+)

The RIGHT terminal is activated by a 12 volt signal from the turn signal flasher. When this terminal has 12 volts, a green arrow will light up on the display face. An existing wire from the vehicle for the right turn indicator can be used or a new wire can be connected from the turn signal flasher or power wire feeding the right turn signal bulb. This terminal is also monitored by the turn signal reminder. If the turn signal remains active for more than ¾ mile, a warning message will be shown.

LEFT (+)

The LEFT terminal is activated by a 12 volt signal from the turn signal flasher. When this terminal has 12 volts, a green arrow will light up on the display face. An existing wire from the vehicle for the left turn indicator can be used or a new wire can be connected from the turn signal flasher or power wire feeding the left turn signal bulb. This terminal is also monitored by the turn signal reminder. If the turn signal remains active for more than ¾ mile, a warning message will be shown.

HIGH (+)

The HIGH terminal is activated by a 12 volt signal from the headlight high beam wire. When the terminal has 12 volts, a blue high beam indicator will light up on the display face. An existing wire from the vehicle for the high beam indicator can be used or a new wire can be connected from the high beam side of the high/low beam switch.

BRAKE (-)

The BRAKE terminal can be used as a brake system warning indicator. The BRAKE input is activated by a ground signal from the brake pressure switch on the master cylinder or from the parking brake set switch. Connect a wire from this terminal to the pressure switch on the master cylinder or consult a vehicle service manual to determine color and location of an existing wire. Whenever the BRAKE input is grounded, the system will display a red exclamation indicator on the display face.

ENGINE (-)

The check engine terminal is used with fuel injection ECM's to indicate engine problems and trouble codes. The ENGINE input is activated by a ground signal from the ECM. Whenever the check input is grounded, the system will display a red check engine indicator on the display face.

For certain ECM's, when placed into diagnostic mode, trouble codes can be read by counting the flashes of the check engine indicator. Consult a service manual for the fuel injection system that you have for further information on trouble codes or if that is how your system operates. With some ECM's, a 12 volt light bulb may need to be connected in addition to the ENGINE input in order to provide proper current loading. In this case, both the bulb and our display system indicator would come on when the check engine wire is "active".

Emissions note:

If your vehicle requires emissions testing in your area then the ENGINE terminal must be connected to the ECM service engine wire. A **BIM-01-x** or **STA-1000** cannot be used to supply the Check Engine or Service Engine indicator.

DIM (+)

The backlights and needles in the HDX systems are designed to illuminate when the headlights are turned on. Connect the DIM terminal to the taillight or parking light circuit so it has 12 volts whenever the headlights are on. When power is applied to the DIM terminal, the instruments will illuminate at a preset brightness level. When the DIM terminal does not have power, the backlighting will be off, unless they're enabled in setup to be on in day time operation.

The night brightness level is adjustable two different ways. This preset brightness is adjusted in the setup menu "LIGHTING". See DIM ADJ for a description of the second method.

It is also possible to override the night dimming. If you need the headlights on during the day for a parade or other event but still want the gauges in daytime mode, toggle the headlight switch off and on three times. "DIM DISABLED" will briefly be displayed and the gauges will remain in daytime mode with the headlights on.

BIM I/O

This connector is used to connect bus expansion modules (BIM). Do not attempt to plug in any other device to this jack or damage to the control box will occur. This connector should be left open, unless using a Dakota Digital product designed for it. Operation is discussed with BIM units purchased separately from Dakota Digital.

SETTING UP THE CONTROL BOX

Below is the list of setup menus. Setup mode is entered by holding both of the switches for approximately 4 seconds. "ENTER SETUP" and a scrolling bar will be shown while the switches are held. An "*" will be displayed by the currently saved setting in each of the menus. Selecting "BACK" will make no changes in the current menu and go will go back up one level. A separate SETUP MENU GUIDE is also available to provide a more detailed, graphical listing of the setup menu. ***Pay close attention to Setup menus and options as incorrect settings will cause faulty readings on the displays.*** Menu options marked with "**" are only available with version HX07 and above or RX01 and above.

Main Menu	Sub Menu	Description
INFO		Current sensor & gauge settings
BLUETOOTH		
	OFF	Disable Bluetooth connections
	SETUP ONLY	Allow Bluetooth connections only while in setup
	ALWAYS ON	Allow Bluetooth connections when key is on
	BACK	Exit Bluetooth setup menu
SPEED		
	AUTO CAL	Calibrate speed by driving a measured mile or km
	ADJUST	Adjust the speed calibration
	SERVICE (500 – 7500)	Select the service countdown reset value
	UNIT (MPH, km/h)	Select speed unit
	INPUT	
	SIGNAL (SENSOR, BIM)	Select between a wired sensor or BIM data
	PULLUP (ON, OFF)	Select input pullup state
	OUTPUT (2K PPM, 4K PPM)	Select output speed signal PPM setting
	BACK	Exit speed setup menu
TACH		
	INPUT	
	CYLINDER (BIM, 1 – 16)	Set engine cylinder count or BIM data input
	TYPE (5V LOW, 12V HIGH)	Select RPM signal voltage level
	UPDATE RATE (SLOW, MID, FAST)	Set RPM update rate
	SHIFT LIGHT (2200 – 14800)	Set RPM shift warning point
	BACK	Exit tach setup menu

Main Menu	Sub Menu	Description
VOLT		
	WARN LO (10.0 – 13.1)	Set low volt warning point
	WARN HI ** (16.5 – 20.0)	Set high volt warning point
	BACK	Exit volt setup menu
WATER		
	INPUT (SENSOR, BIM)	Select between a wired sensor or BIM data
	UNIT (F, C)	Select temperature unit
	WARNING (150-300F / 65 -148c)	Set high temp warning point
	BACK	Exit water setup menu
OIL		
	INPUT (SENSOR,BIM,300PSI,150PSI)	Select between a wired sensor or BIM data
	WARN (LOW 5 – 36)	Set low pressure warning point
	BACK	Exit oil setup menu
FUEL		
	INPUT	Select sensor type
	(BIM, SW 240-33, GM 0-30, GM 0-90, 63 VETTE, GM 40-250, GM 250-40, FORD 73-10, FORD 10-150, VDO 10-180, ASIA 112-4, MANUAL ADJ)	
	MANUAL ADJ -> PROGRAM	Calibrate manual adjust fuel sensor
	RANGE	
	LEARN RESET	Clear and restart learning range to empty
	BACK	Exit fuel setup menu
LIGHTING		
	THEME	
	DAY&NIGHT	Color theme preset for both day and night mode
	DAY	Color theme preset for day only
	NIGHT	Color theme preset for night only
	BACK	Exit theme setup menu
	DAY LIGHT (OFF, ON)	Change day time backlighting
	NIGHT LIGHT (1-30)	Change preset night dimming
	CUSTOMIZE	
	DAY MODE	
	FACE PLATE	Select day face backlight color
	NEEDLE	Select day needle color
	DISPLAY	
	GAUGE	Select day TFT digital number color
	LABEL	Select day TFT text label color
	GRID	Select day TFT group separator line color
	INTENSITY	Set day TFT brightness
	BACK	Exit display setup menu
	BACK	Exit day mode setup menu
	NIGHT MODE	
	FACE PLATE	Select night face backlight color & brightness
	NEEDLE	Select night needle color & brightness
	DISPLAY	
	GAUGE	Select night TFT digital number color
	LABEL	Select night TFT text label color
	GRID	Select night TFT group separator line color
	INTENSITY	Select night TFT brightness
	BACK	Exit display setup menu
	BACK	Exit night mode setup menu
	BACK	Exit customize setup menu
	NDL COLOR	Does not apply to HDX systems
	RESET COLOR	Return all colors to factory default
	BACK	Exit lighting setup menu

Main Menu	Sub Menu	Description
BIM		Menu options depend on BIM attached.
DISPLAYS		
	INFO POPUP	Select display location for information messages
	WARN POPUP	Select display location for warning messages
	INDICATORS	Turn TFT display indicators on or off
	TURN REMIND	
	GAUGE	Turn indicators in the system face are displayed when wired to control box
	OEM	Turn indicators in the system face are not displayed when wired to control box
	BACK	Exit turn remind setup menu
	GROUP SET	
	GROUP (A,B,C)	Select readings shown in group display
	SCREEN (1,2,3,4)	Change reading for screen area shown
	SAVE	Save group display readings
	GROUP MAX ** (AB,ABC,ABCD,ABCDE)	Select how many display groups are available
	RESET ALL	Return all display settings to factory default
	BACK	Exit display setup menu
GEAR		Select gear position display style and order
	(PRNODSL, PRNOD21, PRN4321, PND21R, PRN1234, PRN12DO)	
SET ODOM		Preset odometer reading with current vehicle miles (see page 28)
WARN OUT		
	OUTPUT SET (ON/OFF)	Select gauges that trigger the warning output
	BUZZER SET (ON/OFF)	Select gauges that trigger the warning buzzer
	BUZZER TONE (0-10)	Select the warning buzzer sound
	BUZZER VOL (0-10)	Select the warning buzzer volume
	SPD CNT VOL (OFF, LOW, MID, HIGH)	Select the speed controlled volume setting
	BACK	Exit the warn out setup menu
SW SOUND		
	DURATION (0-10)	Select the switch buzzer click duration
	VOLUME (0-10)	Select the switch buzzer click volume
	SPD CNT VOL (OFF, LOW, MID, HIGH)	Select the speed controlled volume setting
	BACK	Exit the sw sound setup menu
EXTRA LABEL		
	EX+, EX-, WAIT **, 4x4 **	
	LABEL	Change the 8 letter label for this input
	DISPLAY (ON CHANGE, ALWAYS)	Select always active or only momentarily when it changes
	TYPE (WARN, INFO)	Select warning or information message type
	BACK	Exit the extra label setup menu
	DOOR OPEN ** (EX+, EX-)	Select input that will light up the display when a door is opened
VERSION		View the control and display software version codes
DEMO MODE		
	BEGIN	Start the gauges in show demonstration mode.
	BACK	Exit the demo mode menu
EXIT SETUP		Exit the setup menu and return to normal operation

To enter the setup mode, press and hold both switches any time the key is on. The display will show “ENTER SETUP” with a scrolling bar. Release the switches when “RELEASE” is shown. The display should light up and show SETUP on the TFT. Tapping the right switch will move down through the menus and tapping the left switch will move up through the menus. Holding either switch will select or save the current option. Holding both switches after you are in setup will switch between a standard menu view and a larger, zoomed menu view.

You can exit setup at any time by switching off the keyed power or selecting “EXIT SETUP”.

SPEEDOMETER SETUP/CALIBRATION

There are two main methods for calibrating the speedometer, Auto Cal and Adjust. Auto Cal requires that you have one measured mile marked out. Adjust requires you to follow another vehicle going at a set speed, use a handheld GPS with speedometer function, or time yourself over a mile to determine your speed. If you are using a BIM-01-x or GPS-50-x to provide the speedometer reading, then the AUTO CAL option will not be available.

**** Dakota Digital recommends you start with the Auto Cal method to get the speedometer close. If you find it's reading too fast/slow after the Auto Cal, then attempt the Adjust mode.***

With the key on and engine running, press and hold both switches. The TFT will show "ENTER SETUP" with a scrolling bar. Once "SETUP" "RELEASE" is shown, release both switches. Tap the right switch until SPEED is highlighted in the center. Press and hold either switch until "RELEASE" is shown. "SETUP" "SPEED" along with the current speed cal should be displayed.

Now you can tap either switch to scroll through the sub-menus, "AUTO CAL" "ADJUST" "SERVICE" "UNIT" "INPUT" "OUTPUT" or "BACK". When you get to the desired sub-menu, press and hold the switch to select it.

Speed sensor setup (INPUT)

This menu is used to set the speed sensor input type. You can use the supplied pulse generator or existing speed sensor for most applications. You can also read the speed signal with the use of a bus interface module (**BIM**) or **GPS-50-x**. Dakota Digital offers a BIM-01-X that will allow you to read the speed signal from an ECU if you are installing the system in a vehicle equipped with the OBDII port or a drivetrain from a newer vehicle; most 1996 and newer vehicles have this. The Dakota Digital GPS-50-X will provide a GPS satellite speed reading for the system.

If you are using a Dakota Digital pulse generator or feeding an ECU signal into the SPEED INPUT - SIG terminal, this is considered a SENSOR signal.

The options under this menu are SIGNAL, PULLUP, and BACK.

SIGNAL allows selection between SENSOR, which is a speed signal wired into the SPEED INPUT – SIG terminal, and BIM, which is speed data provided through the BIM connector by a BIM-01-X or GPS-50-X.

PULLUP changes whether the resistive pullup is ON or OFF at the SPEED INPUT – SIG terminal. This should always be left ON unless directed by a technician to turn it OFF for special situations.

BACK exits the INPUT menu and returns to the SPEED menu.

Speed unit setup (UNIT)

This menu is used to set the primary unit for the speedometer and odometer. Select MPH or km/h. These units are used for all speed, distance, and performance readings shown on the TFT. Make sure the correct unit is selected before beginning speed calibration. The unit can be changed at any time without causing problems with the stored odometer reading.

Auto Cal (AUTO CAL)

This option will be greyed out if SPEED -> INPUT -> BIM is selected.

This menu is used to calibrate the speed signal by driving a measured mile. Start this procedure with the vehicle stopped at the beginning of a known measured mile. Enter setup by holding both switches. Select the SPEED menu, and then select AUTO CAL.

"AUTO CAL" and either "DRIVE 1 MI" or "DRIVE 1 km" will be displayed with "0" below it.

The number will count pulses from the speed sensor as you drive. This number should stay at "0" until you start driving. If this is number is increasing while stopped, you may have something wired wrong or are picking up interference and need to check connections and wire routing before continuing or you will have incorrect readings later. If the number stays at zero while you are driving then the speed sensor is not providing a reading and the wiring and mechanical connection will need to be checked.

Begin driving the measured mile. The reading should start to increase as you travel, indicating the pulses received from the speed sensor or VSS. This is known as the pulses per mile (PPM). The acceptable range for this is about 2,000 – 250,000.

Once you reach the end of the marked mile, or are passing the marker, tap either switch to finish and save the new calibration

NOTES: You do not have to drive at a constant speed nor do you have to avoid stopping during Auto Cal. When completed, you do not need to stop, you may, but you can also just tap either switch as you pass the 1 mile mark.

The message display cannot be used to determine when the mile has been driven, it's only there as a reference to indicate pulses are coming into the control box. Even if you have an 8,000 PPM sensor you may calibrate at 9xxx PPM (for example) due to gearing and tire size.

Also be aware that the odometer miles are calculated from the speedometer cal value; if it is not calibrated properly, the odometer miles could be higher/lower than actual.

******If you do not receive more than 2,000 pulses during calibration the unit will error out and display "TOO LOW" and not update the speed calibration.***

Adjust Mode (ADJUST)

Adjust is slightly different depending on what your input signal is selected to in the SPEED -> INPUT -> SIGNAL menu.

If "SENSOR" is selected for the signal input type, it will allow you to adjust the signal that is being supplied to the SPEED INPUT - SIG terminal coming from a pulse generator or ECU. The fuel, volt, oil, water, and tach will operate normally. The speedometer needle will show the speed reading and the TFT display will display a digital speed reading. Begin driving at a known speed. Tap the right switch to go up by 1 MPH or tap the left switch to go down by 1 MPH. Holding either switch will make a continuous change in the speedometer reading until it is released. The new calibration will be saved when the there is no switch press for eight seconds. You can exit the ADJUST mode by turning the ignition key off or by holding both switches at the same time.

If "BIM" is selected for the signal input type, the speed signal should be coming into the BIM I/O port through the use of a **BIM-01-x** or **GPS-50-x** module. The adjustment ratio ranges from 75 – 125% on this setting as it is assumed that the signal from the external device is the correct pulse rate, there are only provisions for slight adjustment. The menu will show the current cal ratio. Tap the right switch to increase the speedometer or tap the left switch to decrease it. Hold either switch to save the cal ratio. If set to 100 the signal is uncorrected and whatever the BIM module is reading is displayed on the dash.

NOTES: For adjust mode you can follow another vehicle, time yourself, or use a GPS as a reference. A chassis dyno is another excellent way to use the Adjust mode.
Also be aware that the odometer miles are calculated from the speedometer cal value; if it is not calibrated properly, odometer miles could be higher/lower than actual.

Service countdown meter (SERVICE)

The service countdown meter allows you to set a mileage value that will decrease as the odometer miles increase. When the value gets to zero, a message "SERVICE DUE" will appear on the TFT message display on power up to remind you that service is due. This can be used for routine maintenance reminders such as oil changes. The mileage that this is reset to can be adjusted from 500 – 7500 miles in 500 mile increments. This is the reading that the SERVICE mileage will reset to when you hold a switch with it selected. If you wish to disable the service mile feature you will need to go to the DISPLAYS -> GROUP SET menu and replace the SERVICE reading with a different reading. The "SERVICE DUE" reminder will only function if the SERVICE meter is enabled on one of the group display sets.

Speed Output (OUTPUT)

This option will be greyed out if SPEED -> INPUT -> BIM is selected.

If a speed signal is needed for an ECM or cruise control, the SPD OUT terminal can be used. This terminal can supply a 2,000 ppm (2K PPM) or 4,000 ppm (4K PPM) signal that is created from the SPEED INPUT – SIG terminal.

TACHOMETER SETUP

The control box can be set to read from 1-16 cylinder ignition signals. It can also be set to read either 12 volt tach signals or 5 volt tach signals found on some engine computers. The digital tachometer update rate can be adjusted between slow, mid, and fast. The RPM warning/shift point can be adjusted from 2,200 – 14,800. The digital tachometer will read from 300 – 17,500 RPM.

You can also read the tach signal with the use of a bus interface module (BIM). Dakota Digital offers a BIM-01-X that will allow you to read the tachometer signal from an ECU if you are installing the system in a vehicle equipped with the OBDII port or a drivetrain from a newer vehicle, most 1996 and newer vehicles have this.

With the key on, press and hold both switches. The TFT will show “ENTER SETUP” with a scrolling bar. Once “SETUP” “RELEASE” is shown, release both switches. Tap either switch until TACH is highlighted in the center. Press and hold either switch until “RELEASE” is shown. “SETUP” “TACH” along with the current speed input setting should be displayed.

Now you can tap either switch to scroll through the sub-menus, “INPUT” “UPDATE RATE” “SHIFT LIGHT” or “BACK”. When you get to the desired sub-menu, press and hold the switch to select it.

Tachometer input setup (INPUT)

This menu is used to set the tachometer input type. You can connect a wire from the ignition system or ECM or obtain RPM data from a BIM-01-X.

The options under this menu are CYLINDER, TYPE, and BACK.

CYLINDER will allow the RPM signal to be calibrated from 1 – 16 or BIM can be selected if a Dakota Digital BIM-01-X is connected. If the engine is running the tachometer needle will update as the settings are changed.

TYPE will select between two different tach-input types. A low voltage tach signal (5V LOW) or a high voltage tach signal (12V HIGH). A low voltage signal is usually one that would be obtained up from the ECM. Low voltage may also be considered a 0-5V square wave. If you are getting the tach signal from the ignition coil or points, set this for the high voltage signal “12V HIGH”. To obtain a tach signal from a traditional ignition coil, connect a signal wire to the negative side of the coil.

BACK exits the INPUT menu and returns to the TACH menu.

****NOTE: When selecting the cylinder count, be aware of tach signals coming from ECMs, oftentimes a V-8 engine computer may actually output a 4 cylinder tach signal. This would require the CYLINDER selection to be set for “ 4 ” not “ 8 ” as you might expect.***

Display update setup (UPDATE)

The display update rate can be adjusted so the reading on the digital tachometer doesn’t change so quickly. This is a personal preference and is just used to stabilize the reading by averaging. The value can be changed from SLOW, MID, or FAST.

RPM warning setup (WARN)

This is used for the turn-on point for the TACH WARN output on the control box as well as the RED warning light on the display panel. When the RPM reading is above this setting, the output will activate, providing a ground signal. It can be used to turn on a shift light or other RPM based devices. The value is adjustable from 2,200 RPM – 14,800 RPM in 100 RPM increments.

VOLT SETUP

The volt setup allows you set a warning point that will light a RED indicator on the display panel and show a digital reading on the TFT whenever the voltage reading is above or below the warning values and the engine is running. The low voltage point can be set from 10 -13.1 volts. The high voltage point can be set from 16.5 – 20.0 volts. If the engine is not running, the warning indicator will come on below 10 volts.

With the key on, press and hold both switches. The TFT will show “ENTER SETUP” with a scrolling bar. Once “SETUP” “RELEASE” is shown, release both switches. Tap either switch until VOLT is highlighted in the center. Press and hold either switch until “RELEASE” is shown. “SETUP” “VOLT” along with the current system voltage should be displayed.

Now you can tap either switch to scroll through the sub-menus, “WARN LO”, “WARN HI”, or “BACK”. When you get to the desired sub-menu, press and hold the switch to select it.

WATER TEMP SETUP

The water temp setup allows you select the units the temperature is displayed in, Fahrenheit or Celsius. The input type can be selected between SENSOR for the unit provided with the system or BIM if a Dakota Digital BIM-01-X is used. It also allows you to set a high temperature warning point that will light a RED indicator on the display panel and show a digital reading on the TFT whenever the temperature is higher than the warning set point.

With the key on, press and hold both switches. The TFT will show “ENTER SETUP” with a scrolling bar. Once “SETUP” “RELEASE” is shown, release both switches. Tap either switch until WATER is highlighted in the center. Press and hold either switch until “RELEASE” is shown. “SETUP” “WATER” along with the current sensor resistance should be displayed.

Now you can tap either switch to scroll through the sub-menus, “INPUT” “UNIT” “WARNING” or “BACK”. When you get to the desired sub-menu, press and hold the switch to select it.

Temp sensor setup (INPUT)

This menu is used to set the temp sensor type. Dakota Digital only offers one temp sensor for this system, it is **SEN-04-5**, 100-300 F(40-150 C), 1/8” NPT threads. You can use bushings to adapt the sensor to various locations. You will select “SENSOR” for this.

You can also read the temp with the use of a bus interface module (BIM). Dakota Digital offers a BIM-01-X that will allow you to read the engine temp signal from an ECU if you are installing the system in a vehicle equipped with the OBDII port or a drivetrain from a newer vehicle, most 1996 and newer vehicles have this. You will select “BIM” for this.

Temp unit setup (UNIT)

This menu is used to set the temperature unit, Fahrenheit (F) or Celsius (C). This will be used for all temperature readings on the system.

Temp warning setup (WARNING)

This menu will allow you to select the high temperature warning point. When the gauge value is higher than this point it will light a RED indicator on the display panel and show a digital reading on the TFT. The value is adjustable from 150 – 300 F (65-148 C).

OIL PRESSURE SETUP

The standard Dakota Digital oil pressure sensor for this system is the **SEN-03-8**, 0-100 psi solid state sensor with 1/8" NPT threads. This is the "SENSOR" selection. A 0-300 psi sensor (SEN-03-9), and a 0-150 psi sensor (SEN-03-10) are also supported for engines with oil pressure exceeding 110 psi. If "BIM" is selected for the input type, the oil pressure reading should be coming into the BIM I/O port through the use of a BIM module. The oil pressure setup allows you set up a low pressure warning point that will light a RED indicator on the display panel and show a digital reading on the TFT whenever the pressure is lower than the warning set point and the engine is running.

With the key on, press and hold both switches. The TFT will show "ENTER SETUP" with a scrolling bar. Once "SETUP" "RELEASE" is shown, release both switches. Tap either switch until OIL is highlighted in the center. Press and hold either switch until "RELEASE" is shown. "SETUP" "OIL" along with the current sensor voltage should be displayed.

Now you can tap either switch to scroll through the sub-menus, "INPUT" "WARNING" or "BACK". When you get to the desired sub-menu, press and hold the switch to select it.

Oil pressure sensor setup (INPUT)

This menu will allow you to select the oil pressure sensor being used. "SENSOR" selects the supplied SEN-03-8 sensor. "BIM" allows for reading the oil pressure from a BIM module in a compatible vehicle. "300 PSI" selects the optional SEN-03-9 sensor and "150 PSI" selects the optional SEN-03-10 sensor.

Oil pressure warning setup (WARN)

This menu will allow you to select the low pressure warning point. When the display value is lower than this point and the engine is running it will light a RED indicator on the display panel and show a digital reading on the TFT. The value is adjustable from 5 – 36 psi.

FUEL SETUP

The control box is able to read 10 of the most common fuel level sensors found in American-built vehicles 1955 and newer, as well as many aftermarket sensors. The vast majority of customers will use one of the preset options, but if your fuel gauge won't read correctly with one of the 10 presets, the system can be programmed to "learn" the curve of your particular sensor. If "BIM" is selected for the sensor type, the fuel level should be coming into the BIM I/O port through the use of a BIM module. Additionally, the system can learn how far you typically are able to drive on a tank of fuel and provide a range to empty reading.

With the key on, press and hold both switches. The TFT will show "ENTER SETUP" with a scrolling bar. Once "SETUP" "RELEASE" is shown, release both switches. Tap either switch until FUEL is highlighted in the center. Press and hold either switch until "RELEASE" is shown. "SETUP" "FUEL" along with the current sensor resistance should be displayed.

Now you can tap either switch to scroll through the sub-menus, "INPUT" "RANGE" or "BACK". When you get to the desired sub-menu, press and hold the switch to select it.

Fuel sensor setup (INPUT)

This menu is used to select the fuel level sensor type. The table below shows the options and resistance ranges as well as the user programmable option. As the input selection is changed the fuel gauge will update immediately to the new reading.

Sensor type	Menu	Empty R	Full R
GM 0-30 ohm (mid 60's-earlier)	**GM 0-30**	0 ohms	30 ohms
GM 0-90 ohm (mid 60's-late 90's)	**GM 0-90**	0 ohms	90 ohms
GM 40-250 ohm (late 90's-later)	**GM 40-250**	40 ohms	249 ohms
GM 250-40 ohm	**GM 250-40**	249 ohms	40 ohms
GM 90-0 ohm (63-67 Corvette)	**63 VETTE**	90 ohms	0 ohms
FORD 73-10 ohm (earlier -late 80's)	**FORD 73-10**	73 ohms	10 ohms
FORD 20-150 ohm (late 80's-later)	**FORD 20-150**	20 ohms	150 ohms
VDO 10-180 ohm	**VDO 10-180**	10 ohms	180 ohms
SW/SUN 33-240	**SW 240-33**	240 ohms	33 ohms
ASIA 112-4 ohm (various imports)	**ASIA 112-4**	112 ohms	4 ohms
User programmed	**MANUAL ADJ**	User settable	User settable
BIM-01-X ECM provided	**BIM**		

Note: If you select MANUAL ADJ, you must program the curve to your specific fuel sensor. If you are selecting the MANUAL ADJ setting follow the steps below to program your sensor's resistance curve.

Manual adjust fuel sensor curve setup (MANUAL ADJ -> PROGRAM)

You will need to have the sensor out of the tank, or begin with the tank empty and add fuel during the manual adjust fuel sensor setup.

- When "PROGRAM" is highlighted press and hold either switch until "RELEASE" is shown.

The message display will show "MANUAL ADJ" "0%" and "XXXΩ", where xxx is the current resistance the control box is seeing from the fuel sensor. You should be able to move the float up and down at this point and see the resistance values follow the curve of your sensor.

- Now, with the float in the empty position, tap either switch.
- The message display will show "33%" and "XXXΩ". Move the float to 1/3 full and then tap either switch.
- The message display will show "66%" and "XXXΩ". Move the float to 2/3 full and then tap either switch.
- The message display will show "99%" and "XXXΩ". Move the float to the full position and then tap either switch. The new sensor curve is now stored under the "MANUAL ADJ" sensor selection.

******If the resistances recorded during custom calibration are not in sequence you will get a "FAIL" message at the end of calibration. No values will be saved and calibration must be started again. Make sure the resistance of the sensor is linear from empty to full.***

Fuel range setup (RANGE)

This menu is used to reset the range to empty learning routine. Once reset, the system will begin a new learning routine on the next fill-up. The learning routine will not complete until the fuel level has gotten below ¼ tank remaining. The menu options are LEARN RESET or BACK.

******Speed and Fuel must be properly calibrated for this option to work.***

LIGHTING SETUP

The lighting menu, “LIGHTING”, allows you to change the daytime and nighttime display color themes, turn the daytime lighting on or off, adjust the nighttime lighting brightness levels, and create a custom color set.

If you are using the separately purchased **DIM-1** kit from Dakota Digital, the nighttime brightness level doesn’t matter; when the DIM terminal has power applied to it, you have total control of the night brightness level with the twist of a knob. If the **DIM-1** is wired to the DIM ADJ -SIG and GND terminals; the dim preset will be overridden by the **DIM-1** knob.

With the key on, press and hold both switches. The TFT will show “ENTER SETUP” with a scrolling bar. Once “SETUP” “RELEASE” is shown, release both switches. Tap either switch until LIGHTING is highlighted in the center. Press and hold either switch until “RELEASE” is shown. “SETUP” “LIGHTING” should be displayed.

Now you can tap either switch to scroll through the sub-menus, “THEME” “DAY LIGHT” “NIGHT LIGHT” “CUSTOMIZE” “RESET COLOR” or “BACK”. When you get to the desired sub-menu, press and hold the switch to select it.

Color theme setup (THEME)

This menu is used to set the needle, backlight, and TFT colors.

The options under this menu are DAY&NIGHT, DAY MODE, NIGHT MODE, and BACK.

DAY&NIGHT sets both the daytime and nighttime modes to the same colors.

DAY MODE sets daytime colors only.

NIGHT MODE sets nighttime colors only.

BACK exits the THEME menu and returns to the LIGHTING menu.

Tap either switch until the desired setting mode is highlighted, then hold the switch until RELEASE is shown. BACK will now show the current colors. Tap either switch to change the color themes. The display colors will update as the selections are changed. Hold either switch to save the desired color theme.

Daytime backlight and needle setup (DAY LIGHT)

This menu is used to turn the lighting ON or OFF for the needle and backlight. The options under this menu are OFF, ON, and BACK.

Night brightness setup (NIGHT LIGHT)

This menu is used to adjust the brightness level when the headlights are turned on. A bar graph is shown to set the value from 1 (lowest) to 30 (brightest). Tap the left switch to decrease the brightness and tap the right switch to increase the brightness. Hold either switch to save the setting and go back.

Color customize setup (CUSTOMIZE)

This menu allows the colors and brightness to be individually changed for the needle, backlight, TFT gauge, TFT label and TFT separator grid. These changes are done for day mode and night mode separately.

The options under this menu are DAY MODE, NIGHT MODE, and BACK.

DAY MODE sets daytime colors only.

NIGHT MODE sets nighttime colors only.

BACK exits the CUSTOMIZE menu and returns to the LIGHTING menu.

Once DAY MODE or NIGHT MODE is selected the menu options are FACE PLATE, NEEDLE, DISPLAY, and BACK. If DISPLAY is selected then the next set of menu options are GAUGE, LABEL, GRID, INTENSITY, and BACK.

Color customize setup *(continued)*

Tap either switch until the desired setting mode is highlighted, then hold the switch until RELEASE is shown. BACK will now show the current color. Tap either switch to change the color. The colors will update as the selections are changed. Hold either switch to save the desired color.

NEEDLE sets the needle color. For NIGHT MODE the brightness will be set after the color.

FACE PLATE sets the face backlight color. For NIGHT MODE the brightness will be set after the color.

DISPLAY -> GAUGE sets the digital reading color on the TFT.

DISPLAY -> LABEL sets the display label color on the TFT.

DISPLAY -> GRID sets the color for the group display separator lines on the TFT.

DISPLAY -> INTENSITY sets the brightness of the TFT.

Reset colors to factory default (RESET COLOR)

This menu will reset the colors to the default theme set for both day and night.

BUS INTERFACE MODULE SETUP

The bus interface modules (BIM) are an add-on product to Dakota Digital instrumentation systems. They allow you to add auxiliary gauge functions, such as compass, outside temperature, fuel pressure, vac/boost, trans temp, etc., right into the system without having to add additional gauges.

These readings can be added into any of the display groups from the DISPLAYS -> GROUP SET menu. The setup and warning options for the BIM's are set from this menu.

With the key on, press and hold both switches. The TFT will show "ENTER SETUP" with a scrolling bar. Once "SETUP" "RELEASE" is shown, release both switches. Tap either switch until BIM is highlighted in the center. Press and hold either switch until "RELEASE" is shown. "SETUP" "BIM" should be displayed.

If no BIM's are detected, "NONE FOUND" will be displayed. Otherwise a scroll list of the BIM's detected will be shown. Tap either switch to select the desired BIM, hold the switch to begin setup. The setup options available will depend on the type of BIM as well as the type of sensor attached to the BIM. Consult the specific BIM manual for detailed setup instructions.

DISPLAY SETUP MENU

The HDX system allows for complete user adjustability, this includes allowing you to decide which reading you would like to display in the TFT groups, where information messages pop up, where warning messages pop up, where indicators are displayed, and how the turn signal reminder operates. In addition to the fixed Home Screen there are several Group Screens that can be customized with various readings.

With the key on, press and hold both switches. The TFT will show "ENTER SETUP" with a scrolling bar. Once "SETUP" "RELEASE" is shown, release both switches. Tap either switch until DISPLAY is highlighted in the center. Press and hold either switch until "RELEASE" is shown. "SETUP" "DISPLAY" should be displayed.

Now you can tap either switch to scroll through the sub-menus, "INFO POPUP" "WARN POPUP" "INDICATORS" "TURN REMIND" "GROUP SET" "GROUP MAX" "RESET ALL" or "BACK". When you get to the desired sub-menu, press and hold the switch to select it.

Information message location (INFO POPUP)

The information location is where messages like WAIT TO START, 4x4, PLEASE CALIBRATE SPEED, PLEASE CALIBRATE FUEL, and GEAR show up. The default location in the Group Screens is location 2 but any of the 4 Group Screen areas can be chosen.
An example location will be displayed along with the screen number. Tap either switch to change the location, hold either switch to save it and go back.

Gauge Warning location (WARN POPUP)

The gauge warning location is where the digital readout of any gauge that is out of range is shown. The default location in the Group Screens is location 2 but any of the four Group Screen areas can be chosen.
An example location will be displayed along with the screen number. Tap either switch to change the location, hold either switch to save it and go back.

Indicator display setup (INDICATORS)

Most systems have indicators built into the display panel for the high beam, left turn, right turn, cruise control, check engine, and brake warn. These indicators can also be turned on inside the TFT. If the indicators are set to off then they will only show up in the display panel. If turned on they will show up in the TFT display as well.
The indicators will all be activated in the display panel and if INDICATORS ON is selected, an example location will be displayed on the TFT. Tap either switch to change the setting, hold either switch to save it and go back.

Display message location (GROUP SET)

In addition to the fixed arrangement Home Screen, there are three other Group Screens that can be fully customized. Each group has four readings. Each reading in each of these groups can be customized to your preference. The default setting has RANGE, TRIP B, SERVICE, and HOUR TIMER in Group A; VOLTS, FUEL, WATER, and OIL in group B; 0-60 TIME, HIGH SPEED RECALL, ¼ MILE SPEED & TIME, and 1/8 MILE SPEED & TIME in Group C.

To change one of the displayed readings, first select the group it is in. Tap the right or left switch to highlight GROUP A, GROUP B, or GROUP C. Hold either switch to select the group. All of the readings for this group will be shown together. Tapping either switch will change to displaying one reading at a time in its location or a SAVE GROUP menu option. When the single reading you want to change is shown, hold either switch to unlock it for change. Tap either switch to scroll through the available readings. Hold either switch to go back into the group reading menu. When finished changing the readings for this group, tap either switch until the SAVE Group Screen is shown. Hold either switch to save it and go back.

Number of display groups available (GROUP MAX)

The default is for three groups labeled A, B, and C. This can be changed to 2, 3, 4, or 5 groups depending on the number of information screens you wish to monitor. This can be useful if a large number of BIM's have been added to the system.

To change the number of groups available select A B, A B C, A B C D, or A B C D E.

Reset display options (RESET ALL)

This will return the message, warning, and indicator settings back to factory default as well as return all group readings back to the defaults.

GEAR MENU

If you are using a Dakota Digital GSS gear shift sender or have a BIM-01-X and are able to get gear information from the ECM, then the gear display will be active on the TFT display. You can customize how the gears are displayed and in what order. The display will show the letter for the current gear with the gears to either side of it smaller.

With the key on, press and hold both switches. The TFT will show “ENTER SETUP” with a scrolling bar. Once “SETUP” “RELEASE” is shown, release both switches. Tap either switch until GEAR is highlighted in the center. Press and hold either switch until “RELEASE” is shown. The current gear pattern will be shown. Tap either switch to scroll through the available gear patterns. Hold either switch to save it.

ODOMETER PRESET MENU

The control box will allow you to set the odometer miles to match your current odometer reading. This can be done until you have driven 100 miles. ***Once you have driven more than 100 miles, this menu option will be greyed out and no longer available. Make sure you have correctly calibrated your speedometer so you don’t accumulate extra miles. Once you have preset the miles, you cannot change it again without sending the control box back to the factory.***

With the key on, press and hold both switches. The TFT will show “ENTER SETUP” with a scrolling bar. Once “SETUP” “RELEASE” is shown, release both switches. Tap either switch until PRESET ODO is highlighted in the center. Press and hold either switch until “RELEASE” is shown.

The current miles will be displayed with the left most digit flashing. Tap the right switch to increase the flashing digit, tap the left switch to decrease the flashing digit, or hold either switch to move to the next digit to the right. After you finish setting the right most digit, the current reading along with “YES” and “NO” will be displayed. To continue changing or make a correction to the reading tap either switch until NO is highlighted and the hold the switch. To save the reading and go back, tap either switch until YES is highlighted and then hold the switch.

WARNING NOTIFICATION MENU

When a gauge or input reaches a warning point, a notification can be provided from either the WARN OUT terminal or by activating the attached buzzer. The gauges can individually be turned on or off from activating these. The buzzer tone and volume can also be adjusted.

With the key on, press and hold both switches. The TFT will show “ENTER SETUP” with a scrolling bar. Once “SETUP” “RELEASE” is shown, release both switches. Tap either switch until WARN OUT is highlighted in the center. Press and hold either switch until “RELEASE” is shown. “SETUP” “WARN OUT” should be displayed.

Now you can tap either switch to scroll through the sub-menus, “OUTPUT SET” “BUZZER SET” “BUZZER TONE” “BUZZER VOLUME” “SPD CNT VOL” or “BACK”. When you get to the desired sub-menu, press and hold the switch to select it.

Warning output terminal setup (OUTPUT SET)

Any of the attached sensors or BIM’s can activate the WARN OUT terminal when they exceed their warning limits. This terminal can also activate reverse lights when using a GSS-3000 or BIM-01. ***Note, when using this terminal for reverse lights, all other warnings will automatically be set to “OFF”.** To turn readings on or off, tap either switch until the gauge, BIM or REVERSE is shown. The “*” will be next to the current setting. Hold either switch to toggle the setting on or off. To exit the OUTPUT SET menu, tap either switch until BACK is shown and then hold the switch to exit and go back to the WARN OUT menu.

Buzzer warning setup (BUZZER SET)

Any of the attached sensors or BIM's can activate the buzzer attached to the display panel when they exceed their warning limits. To turn readings on or off, tap either switch until the gauge or BIM is shown. The "*" will be next to the current setting. Hold either switch to toggle the setting on or off. To exit the BUZZER SET menu, tap either switch until BACK is shown and then hold the switch to exit and go back to the WARN OUT menu.

Buzzer tone setup (BUZZER TONE)

The sound the buzzer makes for a warning can be adjusted. There are 10 different tones available, numbered 1 – 10 as well as 0 to turn it off. Tap either switch to change the tone, hold either switch to save that tone and go back to the WARN OUT menu. Each time a change is made to the setting the buzzer will sound an example tone.

Buzzer volume setup (BUZZER VOL)

The volume of the buzzer for a warning can be adjusted from 0 – 10. Tap the right switch to increase the volume and the left switch to decrease it. Hold either switch to save the volume and go back to the WARN OUT menu. Each time a change is made to the setting the buzzer will sound an example tone.

Speed controlled volume setup (SPD CNT VOL)

The buzzer volume can be set to increase as you drive faster. The available settings are OFF, LOW, MID, HIGH, and BACK. Tap either switch to change it, hold the switch to save it and go back to the WARN OUT menu.

SWITCH SOUND MENU

When either of the switches are touched, the speaker attached to the display panel can chirp or click to provide audible feedback. The click duration and volume can be adjusted.

With the key on, press and hold both switches. The TFT will show "ENTER SETUP" with a scrolling bar. Once "SETUP" "RELEASE" is shown, release both switches. Tap either switch until SW SOUND is highlighted in the center. Press and hold either switch until "RELEASE" is shown. "SETUP" "SW SOUND" should be displayed.

Now you can tap either switch to scroll through the sub-menus, "DURATION" "VOLUME" "SPD CNT VOL" or "BACK". When you get to the desired sub-menu, press and hold the switch to select it.

Switch click duration setup (DURATION)

The length of the sound the buzzer makes for a switch click can be adjusted. There are 10 different ones available, numbered 1 – 10 as well as 0 to turn it off. Tap either switch to change the duration, hold either switch to save that tone and go back to the SW SOUND menu. Any time a change is made to the setting the buzzer will sound an example click.

Switch volume setup (VOLUME)

The volume of the buzzer for a switch click can be adjusted from 0 – 10. Tap the right switch to increase the volume and the left switch to decrease it. Hold either switch to save the volume and go back to the SW SOUND menu. Any time a change is made to the setting the buzzer will sound an example click.

Speed controlled volume setup (SPD CNT VOL)

The switch click volume can be set to increase as you drive faster. The available settings are OFF, LOW, MID, HIGH, and BACK. Tap either switch to change it, hold the switch to save it and go back to the SW SOUND menu.

EXTRA INPUT MENU

There are two extra, universal inputs available that can be customized. One is activated by a grounding input (EX-) and the other is activated by a 12V input (EX+). When the input is activated a message will be shown on the TFT display. You can customize the text label with up to 8 characters. You can select whether the message is shown for only a few seconds or remains until the input is released. You can select whether the message is for information or a warning. If more inputs are needed, the WAIT input and 4x4 input can also be configured to be extra, universal inputs instead of their default operation. One of these inputs can also be selected to light up the gauge system when a door is opened. The entry screen will remain on for 2 minutes when the door is opened or until the key is turned. This requires version RX01 or newer.

With the key, on press and hold both switches. The TFT will show “ENTER SETUP” with a scrolling bar. Once “SETUP” “RELEASE” is shown, release both switches. Tap either switch until EXTRA INPUT is highlighted in the center. Press and hold either switch until “RELEASE” is shown. “SETUP” “EXTRA INPUT” should be displayed.

Now you can tap either switch to choose between the input terminals, “EX+” “EX-” “WAIT” “4x4” “DOOR OPEN” or “BACK”. Select the desired input terminal, press and hold the switch to select it.

Once the input is selected, the menu options shown are “LABEL”, “DISPLAY”, “TYPE”, or “BACK”. Tap either switch until the desired option is shown, press and hold the switch to select it.

Message label setup (LABEL)

The default label is EX+ and EX-. These can be customized with up to 8 characters each. Letters, numbers, “/”, “.”, “-”, “,”, “+”, “*”, “!”, and “ ” are available. After selecting LABEL, the left most character will be flashing. Tap either switch to change the character. Hold either switch to move one character to the right. After finishing the eighth character it will go back up one menu.

Message display duration (DISPLAY)

The duration the message is shown can be changed. The ALWAYS setting will keep the message displayed as long as the terminal is active. The ON CHANGE setting will show the message briefly for a few seconds when it is activated and the message along with the word OFF for a few seconds when it is released. This option is not available for WAIT or 4x4 unless its label has first been changed.

Message type (TYPE)

The message shown can be either an information type (INFO) or a warning type (WARN). A warning message is shown in RED. This option is not available for WAIT or 4x4 unless its label has first been changed.

Door Open input trigger (DOOR OPEN)

The options for this are “NONE” “EX+” “EX-“ “WAIT” “4X4” or “BACK”. If an input is selected to operate as the door input trigger, it cannot be used as a message display input. The display will light up and show the odometer reading when the key is off and the input is triggered. This will typically be connected to a dome light wire.

VERSION MENU

The version menu, “VERSION” is used to display software code information. Should you have any troubles this information may be requested by the support technician. There will be several different version codes shown for the control and various display sections.

With the key, on press and hold both switches. The TFT will show “ENTER SETUP” with a scrolling bar. Once “SETUP” “RELEASE” is shown, release both switches. Tap the left switch until VERSION is highlighted in the center. Press and hold either switch until “RELEASE” is shown. If “MORE” is shown then the codes will be spanning multiple screens. Tap either switch to change between screens. Hold either switch to exit back to the main menu.

DEMO MENU

A show demonstration mode is available for the gauge system that sweeps the needles and changes the display colors. If this is done at a car show, a relay or other switch may be needed to avoid having the key on all of the time.

With the key on, press and hold both switches. The TFT will show “ENTER SETUP” with a scrolling bar. Once “SETUP” “RELEASE” is shown, release both switches. Tap the left switch until DEMO MODE is highlighted in the center. Press and hold either switch until “RELEASE” is shown. Release the switch. BEGIN should be highlighted. Hold either switch to begin the demonstration mode.

To exit the demonstration mode either turn the key off or hold both switches.

NORMAL OPERATION AND FUNCTION

Here we will describe the common functions and “normal” operation of the HDX system. Please follow the wiring and setup instructions to ensure you have your system calibrated and connected properly for your application. Avoiding setup or selecting incorrect options will cause the gauge readings to be incorrect.

All HDX systems have the obvious gauge sweeps, but the biggest difference between the HDX series and other analog style gauges are the information or message displays. Each HDX system has one or two full color message displays.

The message displays can display a wealth of auxiliary information as well as warning messages and even 16 additional channels with the use of the separately purchased BIM units, bus interface modules.

The display panel has two touch activated switches. These switches do not move or push in. They are activated when your finger touches them. These will not work with gloves on.

Tapping the left side switch changes the focus within the display area to allow readings to be zeroed or reset. An arrow beside the reading indicates that it is selected. Holding the switch will reset or zero that reading if possible. When arrows are shown by all of the readings, holding the switch will reset or zero all readings at the same time. If a reading can be reset, a scrolling bar will begin moving with the text “HOLD TO CLR”. If the switch is released before the bar is completely across then nothing will change. If a reading cannot be reset, the message “CANNOT CLEAR” will be shown.

Tapping the right side switch changes the entire screen display. The Home Screen shows the speedometer, odometer, trip A, and clock. If available it will also show gear, outside temperature, and compass direction. There are 3-5 other screens that can be customized with various readings. The default selections are mileage readings for Group A, gauge readings for Group B, and performance readings for Group C.

Any message or warning screen that is shown on top of another reading can be temporarily cleared by holding either switch. A progress bar will be shown to provide feedback on how long to hold the switch.

SETTING TIME ON CLOCK

Turn the key on. If the clock is not shown, tap the right switch until it is shown. Tap the left switch until the focus arrow is beside the clock. Hold either switch. The display will show “HOLD TO SET”. When “RELEASE” is displayed, release the switch. The hours will begin flashing. Tap the right switch to increase the hours, tap the left switch to decrease the hours. Press and hold either switch to save the hours. The minutes will flash. Tap the right switch to increase the minutes, tap the left switch to decrease the minutes. Press and hold either switch to return to normal operation.

TROUBLESHOOTING GUIDE

This is a list of some problems and their solutions which may be encountered when installing your instrumentation system. If you cannot determine what the problem is or how to solve it, please call our technical assistance line (605) 332-6513 or email dakotasupport@dakotadigital.com.

*** A note on vehicle grounding ***

The most common cause of problems with electric gauges and other sensitive vehicle electronics is poor ground connections. The engine block has the highest ground currents of any point in the vehicle. The ignition system, some electric gauge sensors, starter, alternator, etc. all use the engine block for a ground point. Since the alternator is grounded directly to the engine block, all ground currents in the entire vehicle must pass through the engine block while the engine is running. A weak or loose connection can cause many unexpected problems that may be difficult to track down. The engine block should have heavy ground straps to **both the chassis and the body**. The main **negative cable from the battery should be connected directly to the engine block**.

Symptom	Possible Problem	Solution
System does not turn on and status LED is off.	Control box may not be getting power.	Check if the control box always has 12 volts connected to it's constant power terminal and 12v to IGNITION PWR terminal when the key is on. Do not use a battery charger to power the system.
	Control box may not be getting a ground.	Check if the control box has a proper ground connection.
	The control box may have an internal problem	Contact Dakota Digital's service department with a description of the problem.
System does not turn on and LED flashes RED every 4 seconds.	Constant power connected but no ignition signal at IGNITION PWR terminal.	Check connection at IGNITION PWR terminal. There should be 12v when key is on, and 0v when key is off.
System does not turn on and LED is flashing YELLOW or YELLOW-RED-GREEN.	The display system may not be getting power.	Check the display cable between the display system and control box. Be sure the connectors are plugged in control box and display securely. Check the display system wiring harness for broken or cut wires.
System freezes or hangs and LED is flashing YELLOW or YELLOW-RED-GREEN.	The display harness is damaged.	Check the display system wiring harness for broken or cut wires.
	The display system is not working.	Contact Dakota Digital's service department with a description of the problem.
The tachometer will not show a reading.	The control box is not connected to the engine properly.	Make sure the control box is connected to your particular ignition system properly.
	The engine cylinder setting is incorrect.	Refer to the tach setup section of the installation manual.
	The tach signal setting is incorrect.	Refer to the tach setup section of the installation manual.

Symptom	Possible Problem	Solution
The tachometer reading is incorrect.	The tachometer signal wire is loose or broken.	Check the connections at both ends of the wire.
	The engine cylinder setting is incorrect.	Refer to the tach setup section of the installation manual.
The speedometer will not show a reading.	The speed sending unit is not connected to the control box properly.	Check that all speed sending unit wires are connected to the control box properly.
	The speed sending unit being used is not compatible with the control box.	Use the speed sending unit supplied with the instrument system.
	The speed sending unit is not connected to the transmission properly.	Check that sensor is mounted properly.
		Check that transmission has the appropriate internal parts.
	The sending unit wire is picking up noise from nearby wires.	Isolate the sending unit wire from motor and ignition wires.
The speedometer is reading too fast or too slow.	The speedometer is not calibrated.	Refer to the Speed Calibration section of the installation manual.
With the engine running and the vehicle sitting still, the speedometer reads higher than zero.	A tachometer or ignition wire is too close to to the speed sensor wire.	Reroute or isolate the tachometer wire away from the speed wire.
	There is a ground problem between the speed sensor and the control box.	Make certain the ground wire for the speed sensor is connected directly to the control box ground.
A display shows “OPEN” or “FAIL HIGH”	Sending unit for that gauge is not connected to the control box.	Check the wire from sending unit to the control box for breaks or damage.
		Make sure that the sending unit is wired to the correct terminal.
	Sending unit is not properly grounded.	Make sure the sending unit is grounded properly at the control box.
	On the water or oil, the sending unit is not the correct type.	Use the water and oil sensors that were supplied with the system.
	On the fuel, the control box may be set for the wrong fuel sensor.	Refer to “Fuel Setup” section of the installation manual to ensure that the settings match your fuel sensor.
A display shows “SHORTED” or “FAIL LOW”	The sending unit wire for that gauge is shorted to ground.	Repair or replace shorted wire.
	On the oil, the sensor power wire is broken or not connected.	Make sure the RED wire from the oil pressure sensor is connected to PRESSURE INPUT – PWR.

Symptom	Possible Problem	Solution
The fuel gauge reads backwards, incorrectly, or does not change.	The control box may be set for the wrong type of fuel sensor.	Refer to “Fuel Setup” section of the installation manual to ensure that the settings match your fuel sensor.
	The fuel sensor may not be connected to the control box properly.	Check the connections at both ends of the fuel sensor wire. Make sure the fuel sensor is grounded properly. Ideally it should be grounded to the control box.
	The fuel sensor may not be operating properly.	Check the fuel sending unit with an electrical multi-meter.
	The fuel sensor may have a non-standard resistance range.	Use the manual adj fuel sensor setup. See the Fuel Setup section of the manual for instructions.
The oil or water reading is incorrect.	The engine block may not be grounded to the chassis frame or body properly.	Use heavy ground cables from the battery to the engine block. Make sure both ends of the cable have clean metal-to-metal connections. Use a braided ground strap to ground the engine block to the chassis. Use a large braided ground strap to ground the engine block to the body or firewall.
	The sending units are not grounded at the control box.	Make sure wires are in correct terminals.
	The sending unit wire is picking up noise from nearby wires.	Isolate the sending unit wire from engine and ignition wires.
	The sending unit is not compatible with the control box	Use the sending unit provided with the instrument system.
	Water temperature sensor has an air pocket in the coolant near it.	Warm the engine up to pressurize the coolant system. Slowly loosen the sensor until coolant begins to seep out. Tighten the sensor up again.
The gear shift indicator does not light up.	The optional gear shift sending unit is not connected to the control box.	Connect the sending unit to the control box using the instructions supplied with the sending unit.
The gear shift indicator does not operate properly.	The gear shift decoder is not connected properly, or programmed correctly.	Check the connections to the transmission linkage and to the control box. Check gear shift decoder installation manual.
The internal turn signal or high beam indicators do not light up.	The control box is not connected to the vehicle's electrical system properly.	Check the wires connected to the HIGH, LEFT, and RIGHT terminals on the control box.
	The TURN REMIND setup menu is set to OEM.	Refer to “Display Setup” “TURN REMIND” section of the installation manual.

Symptom	Possible Problem	Solution
The check engine indicator does not operate properly.	The control box ENGINE terminal is not connected to an EFI control module.	This feature is designed to work with engine control systems that provide an active low signal.
The check engine indicator stays on all of the time.	The Engine Control Module (ECM) needs to see the load of a light connected to it.	Connect a light or similar load to the ECM along with the control box.
The touch switches do not operate properly.	Gloves will interfere with the touch switch operation.	Do not wear gloves or wear touch screen compatible gloves.
The clock doesn't keep time.	Constant power terminal is loosing power.	Ensure constant power terminal has 12v even when key is off.
Display is too dark.	Brightness needs to be adjusted.	See manual for brightness adjusting instructions.

HDX Series Specifications		
SUPPLY		
Voltage Range(BAT)	8 to 23 V	
Ignition	> 8 V	
INPUTS (with 12V power)		
Active High		
	Low Max	Min High
High, Left, Right, Gear, Wait, DIM, EX+	4 V	8 V
Active Low		
	Low Max	Min High
SW:L,SW:R, Check, Brake, Cruise, 4x4, EX-	8 V	9 V
Tachometer		
Setting	Low Max	High Min
Normal	3 V	7.5 V
Low-Volt	1 V	4 V
Speedometer		
Square Wave	Sin Wave	
> 1.2 V_{P-P}	> 1.4 V_{P-P}	
OUTPUT		
WARN, SPD	< 600 mA	
Current Draw		
IGN Off	≈ 0.3 mA	
IGN On	≈ 250 - 750 mA	

SERVICE AND REPAIR

DAKOTA DIGITAL offers complete service and repair of its product line. In addition, technical consultation is available to help you work through any questions or problems you may be having installing one of our products. Please read through the Troubleshooting Guide. There, you will find the solution to most problems.
Should you ever need to send the unit back for repairs, please call our technical support line, (605) 332-6513, to request a Return Merchandise Authorization number. Package the product in a good quality box along with plenty of packing material. Ship the product by UPS or insured Parcel Post. Be sure to include the RMA number on the package, and include a complete description of the problem with RMA number, your full name and address (street address preferred), and a telephone number where you can be reached during the day. Any returns for warranty work must include a copy of the dated sales receipt from your place of purchase. Send no money. We will bill you after repair.

Dakota Digital Limited Lifetime Warranty

DAKOTA DIGITAL warrants to the ORIGINAL PURCHASER of this product that should it, under normal use and condition, be proven defective in material or workmanship for the lifetime of the original vehicle it was installed in, such defect(s) will be repaired or replaced at Dakota Digital's option.

This warranty does not cover nor extend to damage to the vehicle's systems, and does not cover diagnosis, removal or reinstallation of the product. This Warranty does not apply to any product or part thereof which in the opinion of the Company has been damaged through alteration, improper installation, mishandling, misuse, neglect, or accident. Dakota Digital assumes no responsibility for loss of time, vehicle use, owner inconvenience nor related expenses.
Dakota Digital will cover the return standard freight once the product has been evaluated for warranty consideration, however the incoming transportation is to be covered by the owner.

This Warranty is in lieu of all other expressed warranties or liabilities. Any implied warranties, including any implied warranty of merchantability, shall be limited to the duration of this written warranty. No person or representative is authorized to assume, for Dakota Digital, any liability other than expressed herein in connection with the sale of this product.

⚠**WARNING:** This product can expose you to chemicals including lead, which is known to the State of California to cause cancer and birth defects or other reproductive harm. For more information go to www.P65Warnings.ca.gov

4510 W. 61st St. North
Sioux Falls, SD 57107
www.dakotadigital.com
dakotasupport@dakotadigital.com

Phone (605) 332-6513
Fax (605) 339-4106

© Copyright 2022 - Dakota Digital