VINTAGE AIR
FRONT RUNNER
ENGINE DRIVE SYSTEMS

# GM LS Series

## Serpentine Drive System

*with & without* **Power Steering**

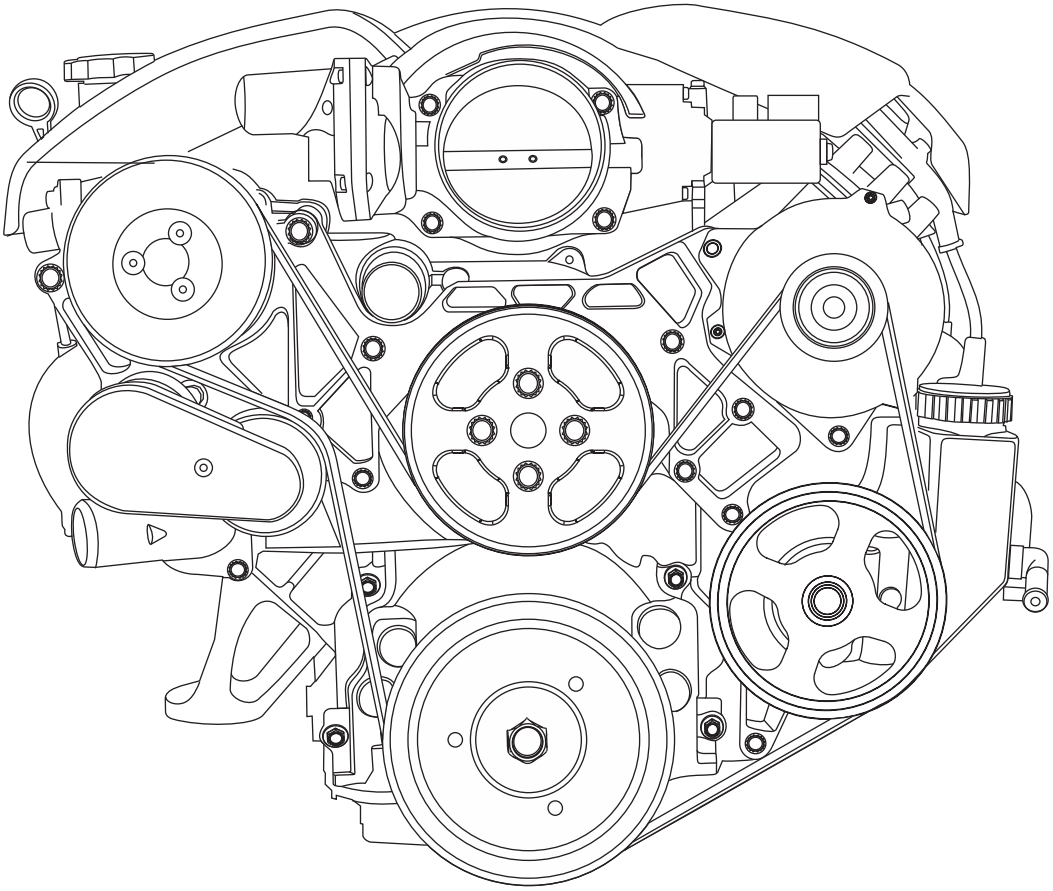

**18865 Goll St. San Antonio, TX 78266**
**Phone: 800-862-6658**
**Sales: sales@vintageair.com**
**Tech Support: tech@vintageair.com**
**www.vintageair.com**

www.vintageair.com

# Table of Contents


Cover..... 1
Table of Contents..... 2
Additional Parts & Accessories..... 3
Information Page..... 4
OEM Front Belt System Removal (If Equipped), Engine Preparation..... 5
Water Pump Mounting Stud and Damper Installation, Water Pump Installation..... 6
Water Pump Mounting Stud and Damper Installation (Cont.), Water Pump Gasket Installation..... 7
Water Pump Installation (Cont.)..... 8
Support Bracket Installation..... 9
Front Runner Main Bracket Assembly Installation..... 10
Alternator Installation..... 11
A/C Compressor Installation..... 12
Power Steering Pulley Installation (If Equipped)..... 13
Water Pump Pulley Installation, Crankshaft Pulley Installation..... 14
Dowel Pin and Tensioner Spacer Installation..... 15
Belt Installation, A/C Compressor Fitting Installation..... 16
Heater Hose and Radiator Hose Installation, Final Steps..... 17

# Additional Parts & Accessories

**The following additional parts and accessories are available for your Front Runner drive system:**

## Power Steering Accessories

**DSE Hose Kit**
**852008** Early GM (1965-81)
**852009** Mustang II
**852012** Ford Fox Body (1979-2004)
(Fox Body rack & pinion has external hardlines)

**Power Steering Hardline**
**852015** TiteFit Hardline
**852016** (Black)

**NOTE: Pump not included with hardline (Shown for reference only).**

**Flow Control Valve**
**852001** For Mustang II Rack & Pinion
(Reduces flow to 2.0 GPM)

**Banjo Fitting**
**852010** For DSE Hose Kit
(High-pressure outlet)
**Banjo Fitting**
**852011** For -6AN Fitting

## Other Accessories

**Compressor Block Fittings**
**342310** Front Runner TiteFit Line Kit
**342311** Front Runner TiteFit Line Kit, fully polished as shown

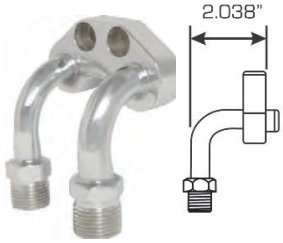


**ProLine LS Swivel Water Neck**
**706002** Polished aluminum designed specifically for our Front Runner applications.
**707101** Stant thermostat for LS swivel water neck (Stant # 14948).

**186 Degree**

www.vintageair.com

# Important Notice—Please Read

***For Maximum System Performance, Vintage Air Recommends the Following:***

**The compressor and alternator supplied with this kit are grounded first via their respective mounting brackets, then to the engine block, and finally to the vehicle chassis. Inspect all mating surfaces to ensure a clean, metallic surface. This may require the removal of paint, corrosion or anodizing from several locations in order to complete the grounding path. In addition, the supplied 4 AWG cable or equivalent <u>must be used</u> to both ensure proper charging and prevent damage and/or fire.**

**After installation, it will be necessary to confirm the quality of the ground and power paths by measuring voltage drop between the electrical components and the battery terminals <u>while operating the alternator at or near its rated load</u> (refer to the diagram provided with the alternator installation instructions).**

## Refrigerant Capacities:

**Vintage Air System:** 1.8 lbs. (28.8 oz.) or 816 grams of **R134a**, charged by weight with a quality charging station or scale. **NOTE: Use of the proper type and amount of refrigerant is critical to system operation and performance. Vintage Air systems are designed to operate with R134a refrigerant only. Use of any other refrigerant could damage your A/C system and/or vehicle, and possibly cause a fire, in addition to potentially voiding the warranties of the A/C system and its components.**

**Other Systems:** Consult manufacturer's guidelines.

## Lubricant Capacities:

**New Vintage Air-supplied Sanden Compressor:** No additional oil needed (Compressor is shipped with proper oil charge).

**All Other Compressors:** Consult manufacturer (Some compressors are shipped dry and will need oil added).

## Service Info:

**Protect Your Investment:** Prior to assembly, it is critical that the compressor, evaporator, A/C hoses and fittings, hardlines, condenser and receiver/drier remained capped. Removing caps prior to assembly will allow moisture, insects and debris into the components, possibly leading to reduced performance and/or premature failure of your A/C system. This is especially important with the receiver/drier.

Additionally, when caps are removed for assembly, **BE CAREFUL!** Some components are shipped under pressure with dry nitrogen.

**Evacuate the System for 35-45 Minutes:** Ensure that system components (Drier, compressor, evaporator and condenser) are at a temperature of at least 85° F. On a cool day, the components can be heated with a heat gun ***or*** by running the engine with the heater on before evacuating. Leak check and charge to specifications.

www.vintageair.com

# Important Information Before Beginning:

- **Read instructions completely and thoroughly before installing the Vintage Air Front Runner system. Follow instructions step-by-step for proper installation.**
- **The damper requires specialized tools for removal and installation. If the proper tools cannot be acquired, Vintage Air recommends having a trained professional perform the removal and installation. Refer to the manufacturer's instructions included with the damper.**

| Required Tools: | | |
|---|---|---|
| (GM OEM #) | J 41816 | Crankshaft balancer remover or equivalent |
| | J 41816-2 | Crankshaft end protector or equivalent |
| | J 42386 | Crankshaft holding tool or equivalent |

- **All threaded holes used as mounting provisions in the engine block should be checked for thread damage and chased / repaired as necessary.**
- **As of January 9, 2019, the water pump thermostat bore was reduced in diameter to accommodate the LS2 and LS3 style thermostats. The LS1 style thermostat may still be used with this latest water pump with a modification to the thermostat bore as noted on Page 6 of this instruction.**
- **Anti-seize must be used on all bolt threads, or mechanical locking will occur, preventing removal of nuts from bolts and causing damage to fasteners.**

## *OEM Front Belt System Removal (If Equipped)*

**Perform the Following:**

1. Disconnect the negative battery cable.
2. Drain the radiator.
3. Remove the fan and belts.
4. Remove the alternator and A/C compressor.
5. Remove the damper.
6. Remove the OEM water pump and thermostat assembly from the OEM water pump (if reusing thermostat).

## *Engine Preparation*

1. Clean all mating surfaces, and remove any dirt, grease or burrs.
2. Clean the damper hub and snout.
3. Wipe a thin coat of oil on the crank snout.
4. When using an LS7 timing cover, it may be necessary to grind the top of the (2) bosses shown to clear the water pump (See Photo 1, below).

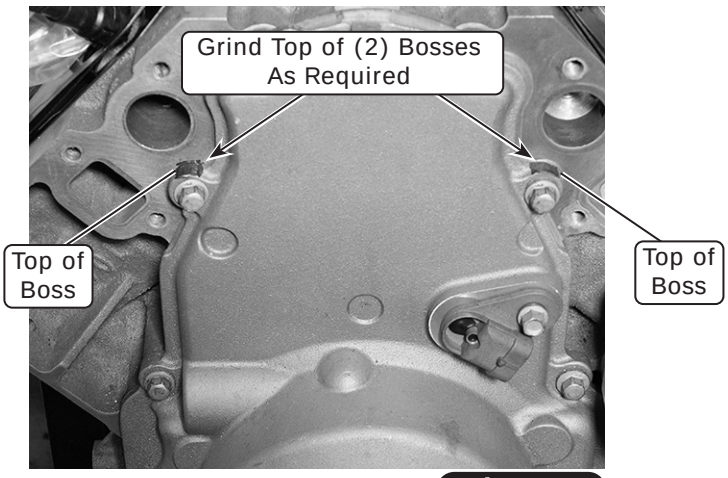


**Photo 1**

# Water Pump Mounting Stud and Damper Installation

1. Install the new damper and bolt as shown in Figure 1, Page 6. **NOTE: Refer to the instructions included with the damper.**
2. Using a clean mating surface, install the (6) 8mm-1.25 x 130mm SS studs as shown in Figure 1, Page 7.
3. Install the water pump gaskets over the studs as shown in Figure 2, Page 7. **NOTE: The 8mm-1.25 x 130mm studs should protrude approximately 4.28" from the face of the block.**

# Water Pump Installation

1. Install the water pump over the 8mm-1.25 x 130mm SS studs as shown in Figure 3, Page 8. **NOTE: Gasket sealer is not required on the gaskets. Components should be installed dry.**
2. LS2/LS3 style thermostat and housing recommended.
3. If using LS1 style thermostat, the thermostat housing must be modified for use by removing the mounting ear. Grind or cut the mounting ear as shown below. Inspect the O-ring seal, and reuse or replace as required. In addition, the LS1 style thermostat will require localized grinding on the water pump thermostat bore for clearance (not shown). **NOTE: The OEM thermostat assembly can be reused, or a new one can be purchased from a local auto parts retailer.**
4. Install the thermostat assembly onto the new water pump. Torque to 11 lb ft.

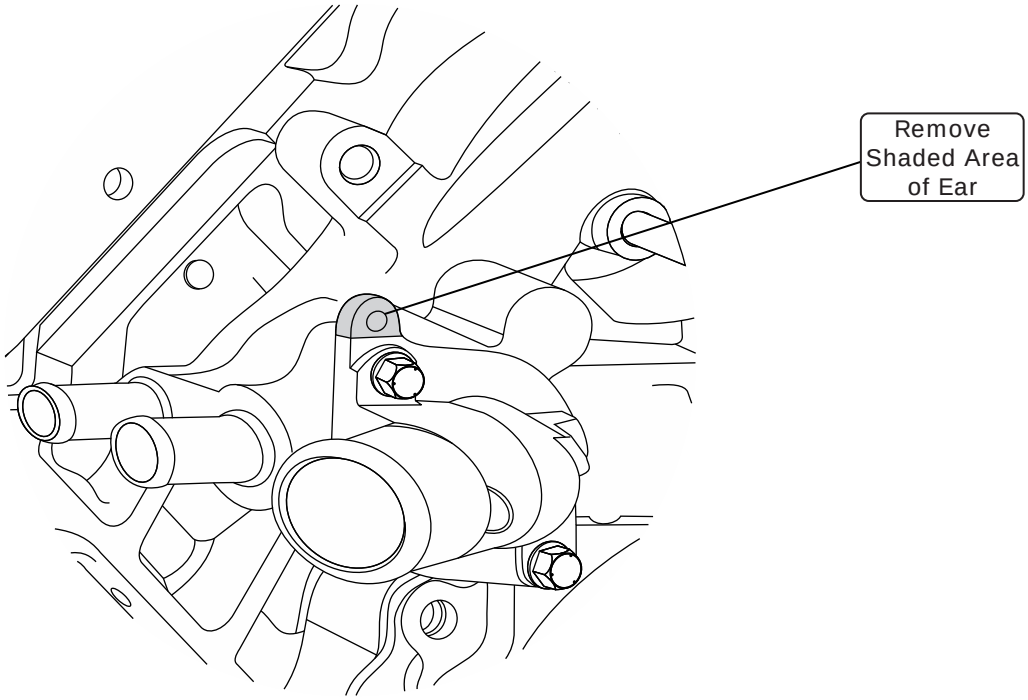

# Water Pump Mounting Stud and Damper Installation (Cont.)

**NOTE: All "LS7" engines were shipped from GM with a factory installed dry sump oiling system. This system used a unique timing cover and an extended crankshaft snout, which was different from all other LS engine configurations. Vintage Air offers a special Front Runner system for LS7 engines that still retain the factory installed dry sump oiling system, labeled "LS7". Many engine builders convert LS7 engines to wet sump configuration by replacing the pump, timing cover, oil pan, and sometimes the crankshaft. These converted engines should use the standard "LS Series" Front Runner system, but will also need a crankshaft spacer, available from Scoggin Dickey, if the stock LS7 crankshaft is retained.**

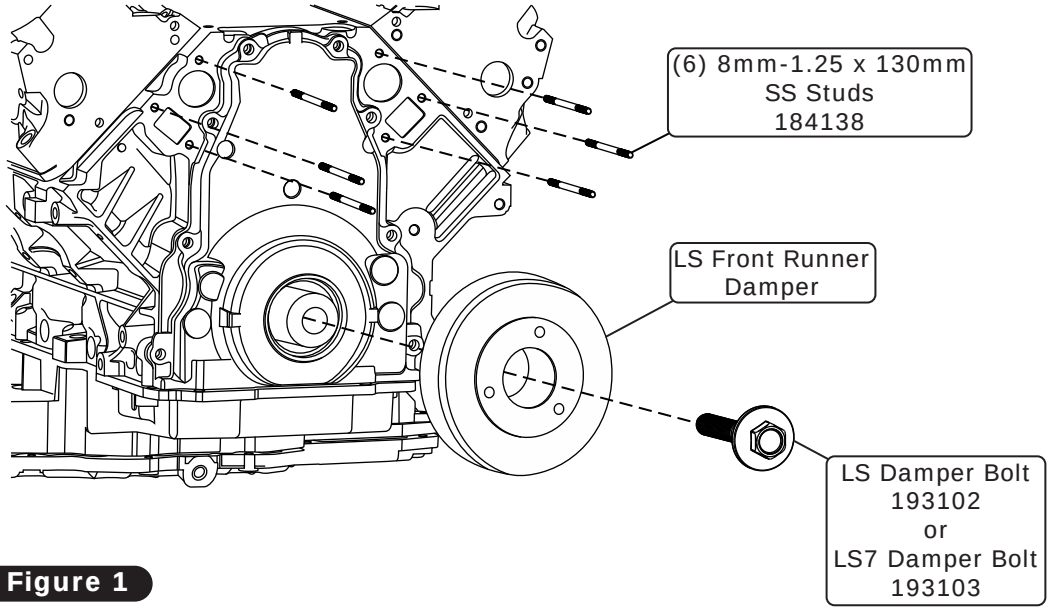


**Figure 1**

# Water Pump Gasket Installation

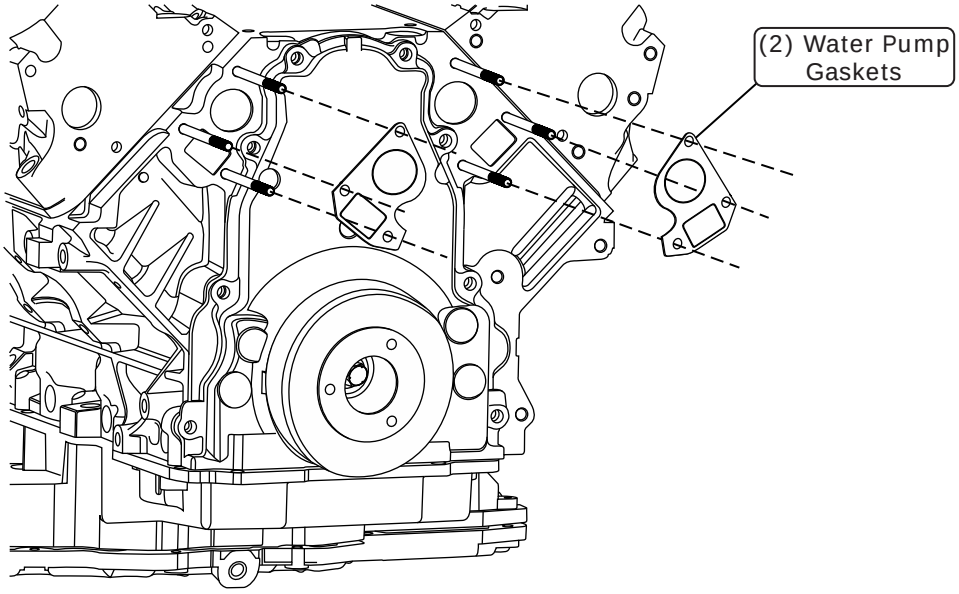


**Figure 2**

# Water Pump Installation (Cont.)

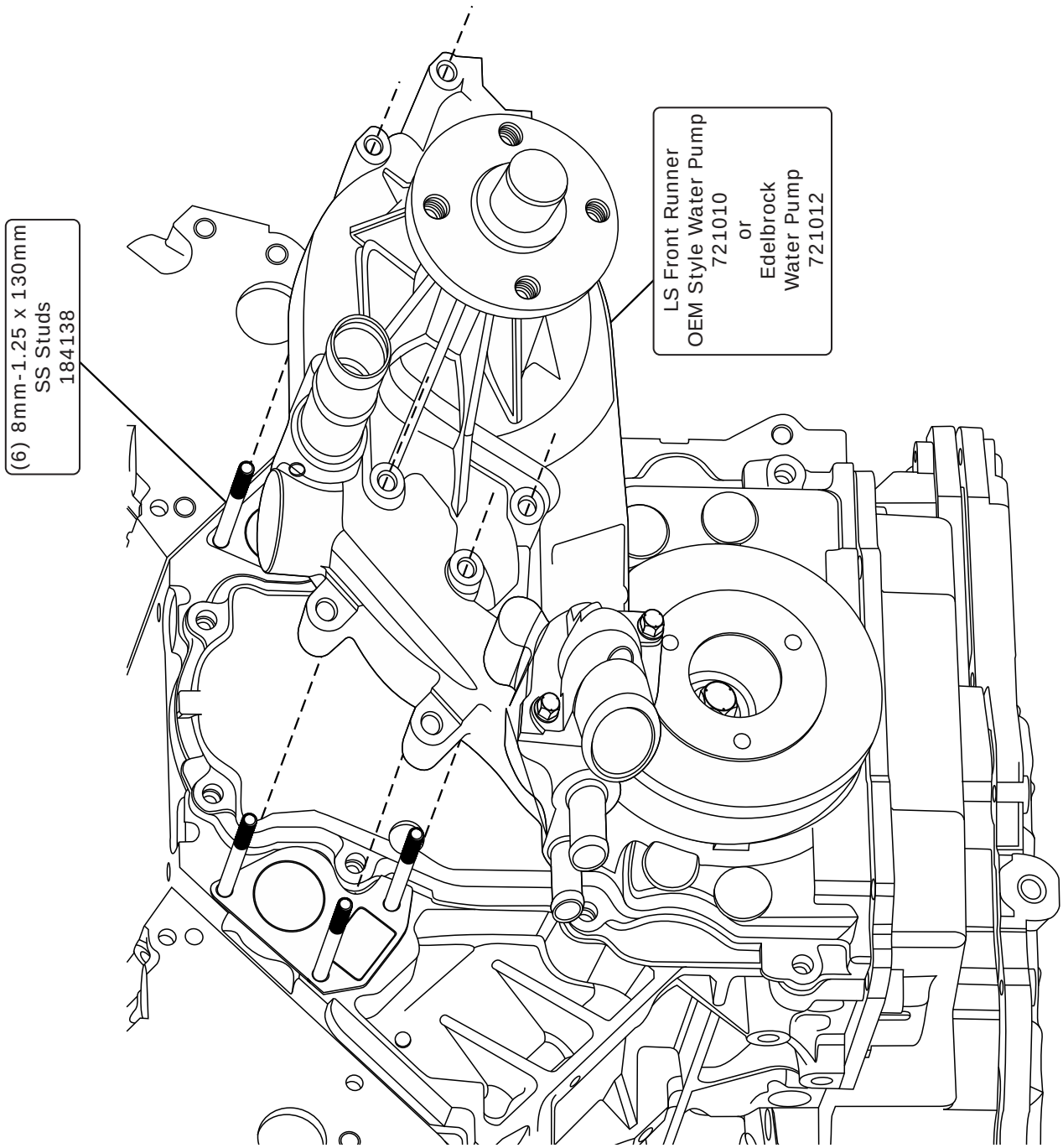


Figure 3

# Support Bracket Installation

**1.** Install the support bracket onto the block using (2) 10mm-1.50 x 70mm 12-Pt SS bolts as shown in Figure 4, below. **NOTE: GM blocks vary in the number of mounting provisions provided, depending on the application. The support bracket will accommodate variance. Hand tighten fasteners only. Do not torque. See Figure 4, below.**

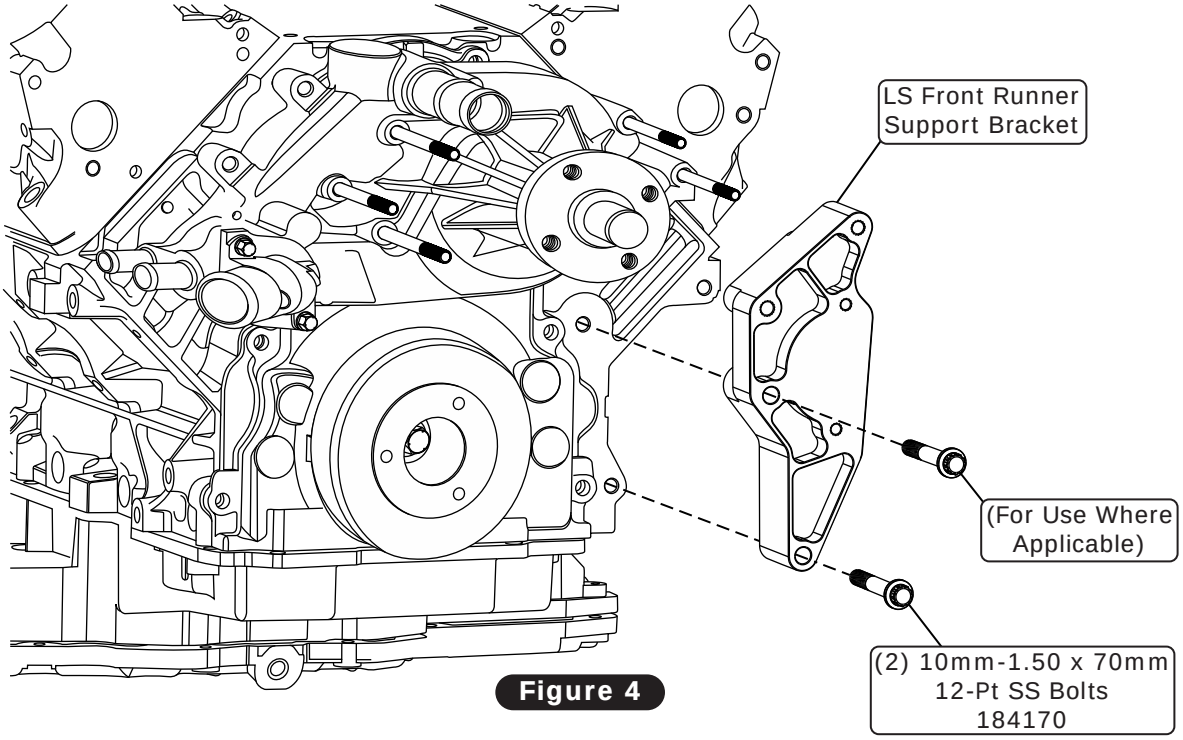


**Figure 4**

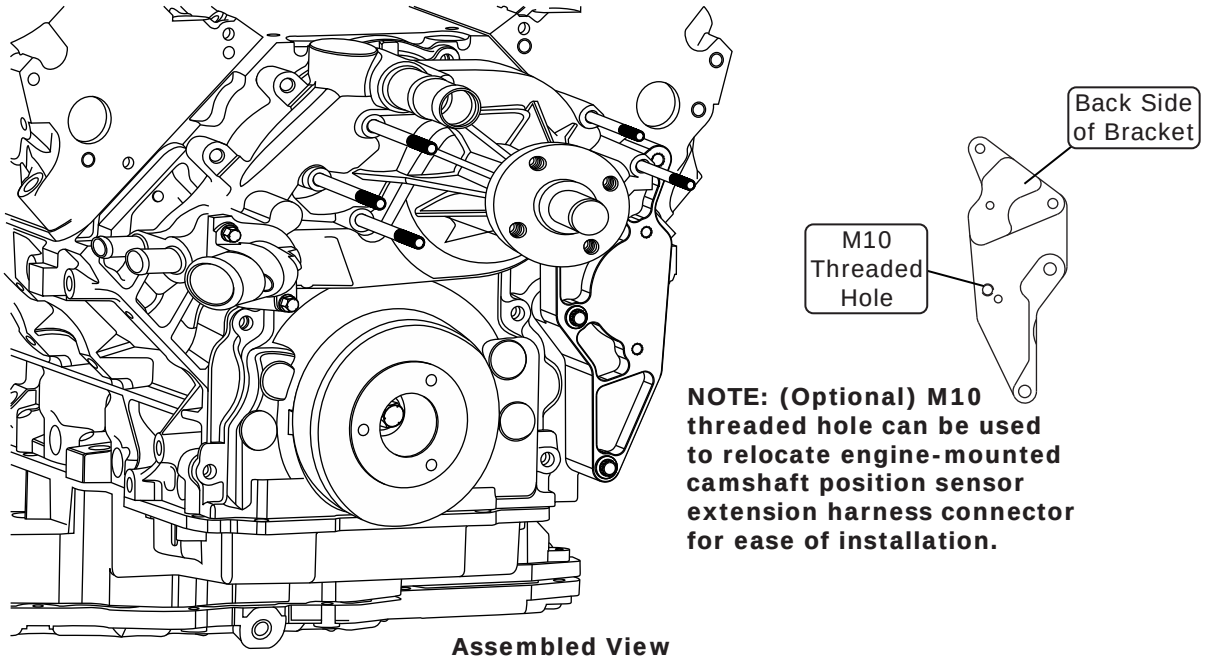


**NOTE: (Optional) M10 threaded hole can be used to relocate engine-mounted camshaft position sensor extension harness connector for ease of installation.**

**Assembled View**

# Front Runner
# Main Bracket Assembly Installation

1. Install the Front Runner main bracket assembly over the water pump and 8mm-1.25 x 130mm mounting studs using (6) 8mm-1.25 12-Pt SS nuts (See Figure 5, below). **NOTE: Do not torque the fasteners at this time.**
2. For an OEM style water pump, insert a .750 OD x .406 ID x .332” L aluminum spacer between the main bracket assembly and the water pump. Install the 10mm-1.50 x 70mm 12-Pt SS bolt through the main bracket assembly, through .332” L aluminum spacer and into the engine. **NOTE: For the Edelbrock style water pump, use a .750 OD x .406 ID x .312” L aluminum spacer and a 3/8-16 x 2 ½” 12-Pt SS bolt.**
3. Install a 10mm-1.50 x 70mm 12-Pt SS bolt through the main bracket assembly and the support bracket as shown in Figure 5a, below.
4. Do not torque the fasteners at this time.

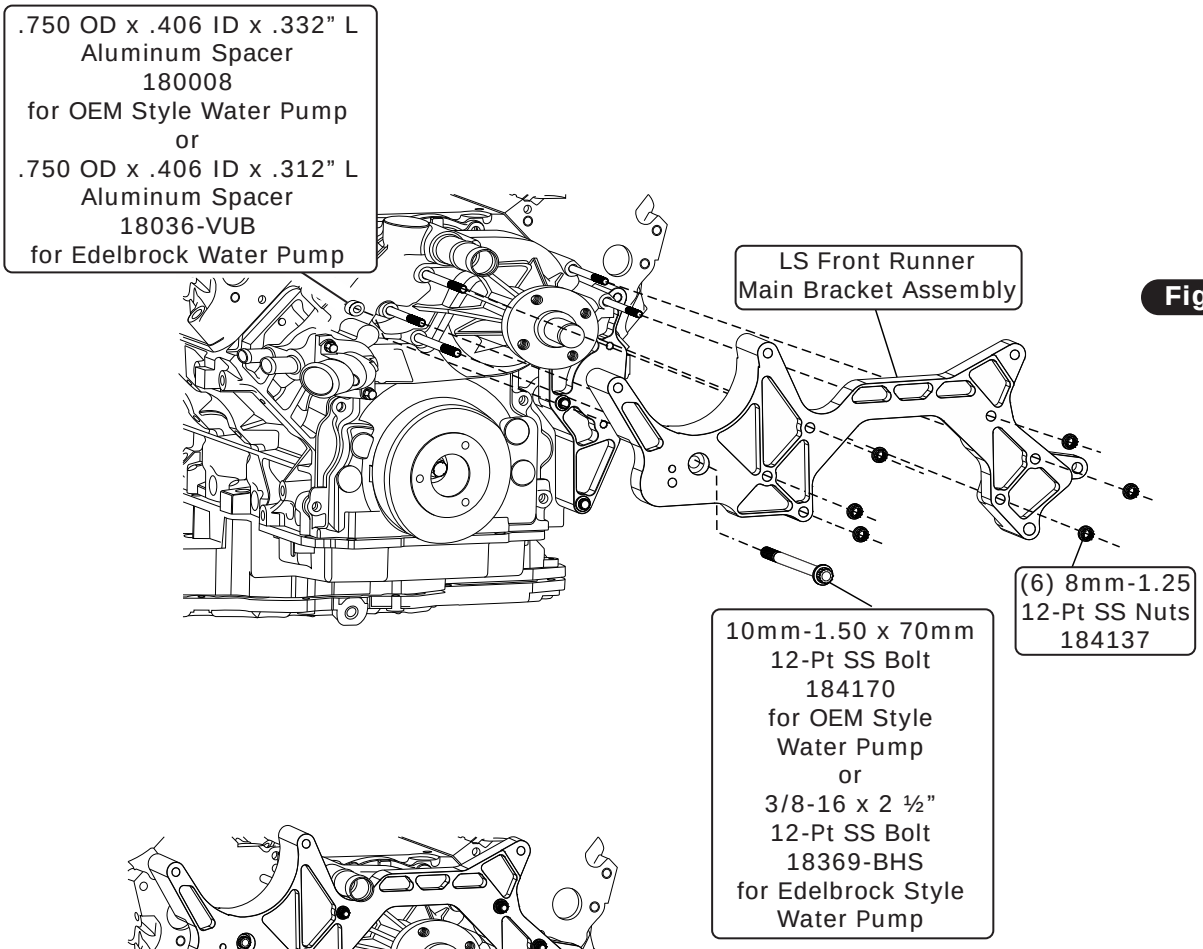


Figure 5

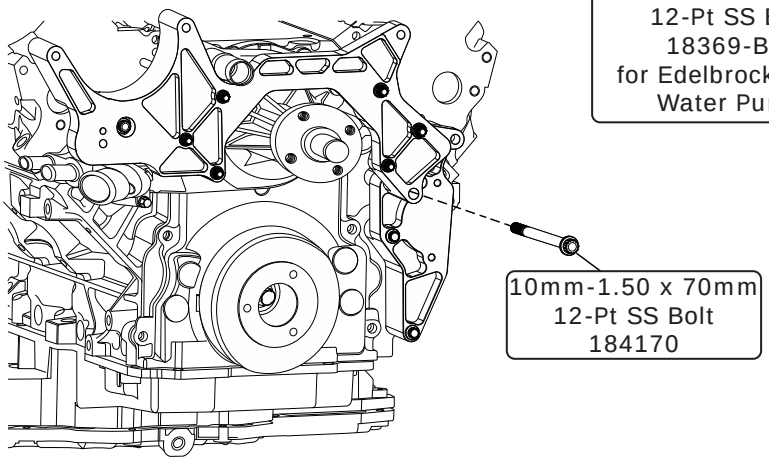


Figure 5a

# Alternator Installation

1. Install the alternator onto the main bracket assembly using a 8mm-1.25 x 40mm 12-Pt SS bolt for the top mount, and a 3/8-16 x 3 ¼" 12-Pt SS bolt for the bottom mount as shown in Figure 6, below. **NOTE: Once the alternator has been installed, fasteners can be torqued in place using a crisscross pattern. Torque 5/16" & 8mm bolts/studs to 22 lb ft. Torque 3/8" & M10 bolts to 37 lb ft.**

**NOTE: With the fasteners loose, brackets can be moved to align alternator with bracket mounting holes.**

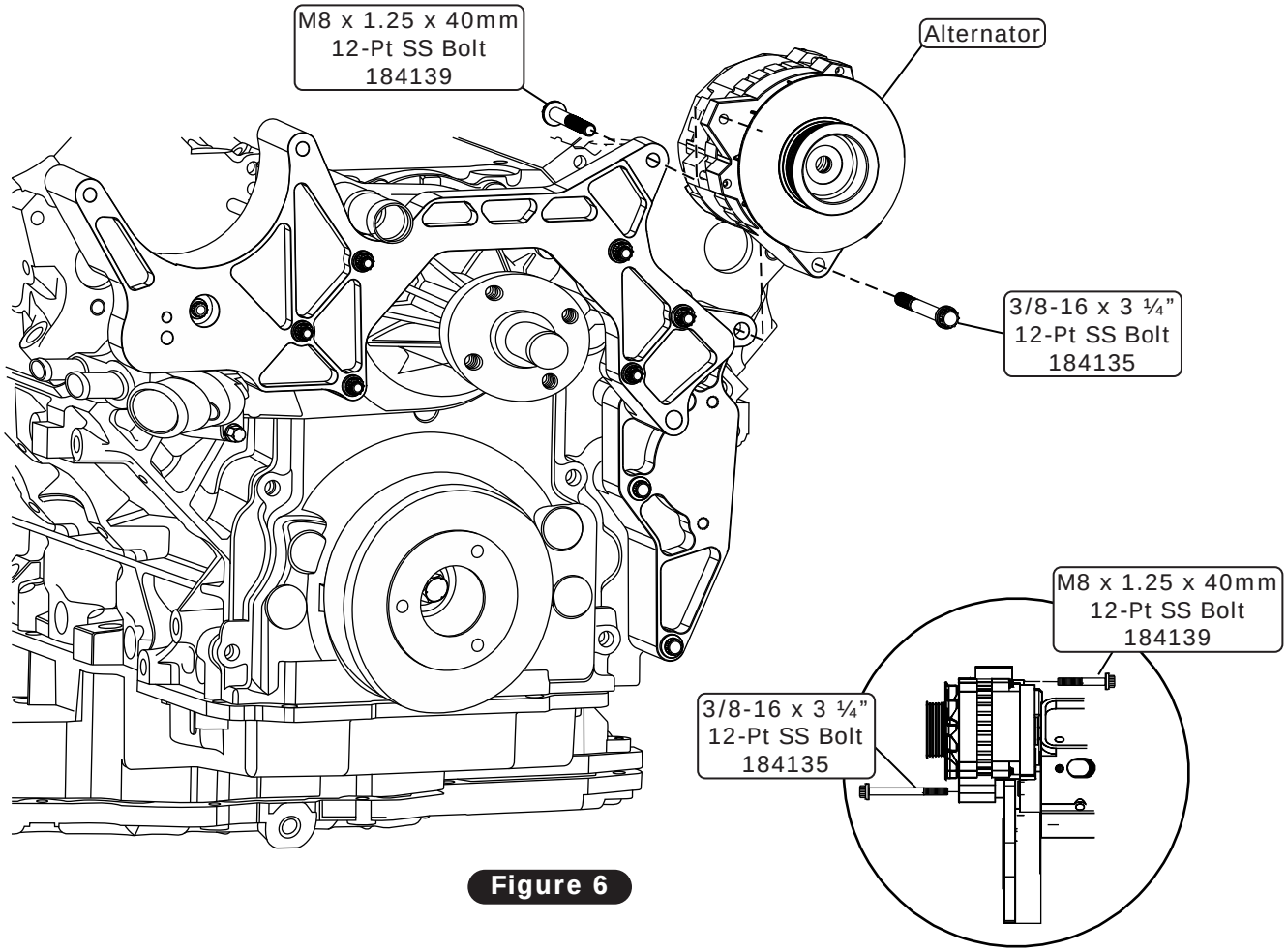


Figure 6

# A/C Compressor Installation

1. Install the A/C compressor as shown in Figure 7, below.
2. Install (2) .789 OD x .315 ID x .297" L aluminum spacers between the compressor and the main bracket assembly, along with (2) 5/16-18 x 4 ¼" 12-Pt SS bolts, (2) 5/16" AN flat washers and (2) 5/16-18 SS nyloc nuts (See Figure 7, below). The compressor mounting ears contain sliding bushings that are drawn in and clamp to the bracket when compressed. Torque to 25 lb ft.

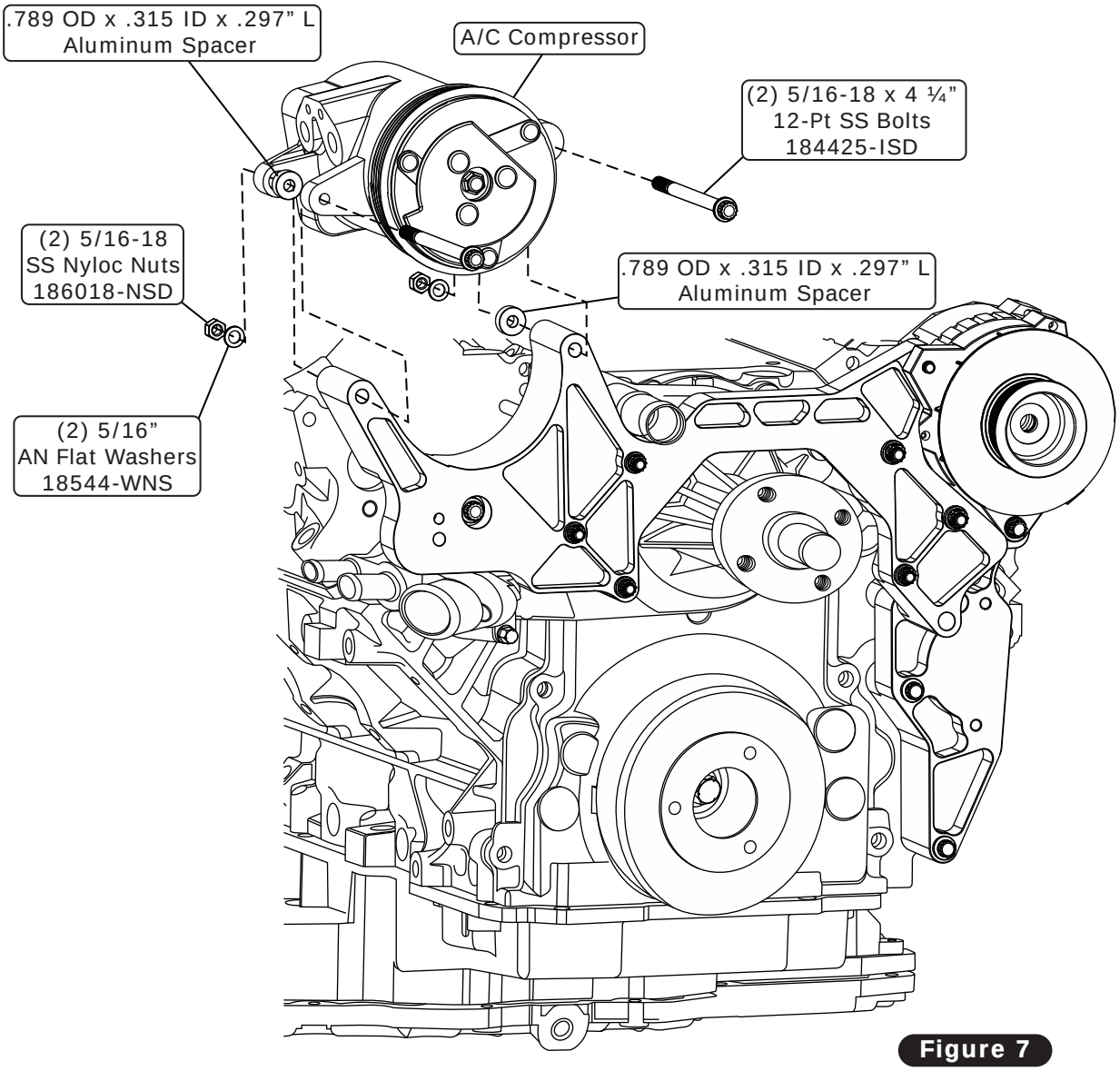


Figure 7

# Power Steering Pump Installation (If Equipped)

**WARNING: The pulley must be installed with the proper tool (K-D Tool #2897 or equivalent). Do not attempt to hammer or press the pulley onto the power steering pump shaft! Failure to use the proper tool will destroy the pump.**

**NOTES:**

- **Some Type-II GM power steering pumps (non-Vintage Air pumps only) have threaded mounting bases. These must be drilled out to allow the Front Runner mounting bolts to pass through the holes and thread into the bracket (See Figure 8a, below).**
- **A high-pressure fitting (not included with this kit) is required for hose connection. Several options are available through Vintage Air (See Additional Parts & Accessories on Page 3 of this instruction booklet).**
- **TC power steering pump flow rate is 3.0 to 3.4 gallons per minute at 1500 RPM. For rack-and-pinion systems that require a lower flow rate, a flow control valve (Vintage Air Part # 852001) may be purchased to reduce the flow to 2.0 GPM (See Additional Parts & Accessories on Page 3). Consult with the rack manufacturer to determine flow rate requirements.**
- **To ensure the functionality and longevity of the power steering pump, proper bleeding of the system is required at the time of installation. See the attached document for power steering system bleeding instructions.**

**1.** Using a power steering pump pulley installer, install the power steering pulley onto the power steering pump (See Figure 8a, below).

**2.** Install the power steering pump using (2) 5/16-18 x 2 ¾" 12-Pt SS bolts (See Figure 8, below). Torque to 28 lb ft.

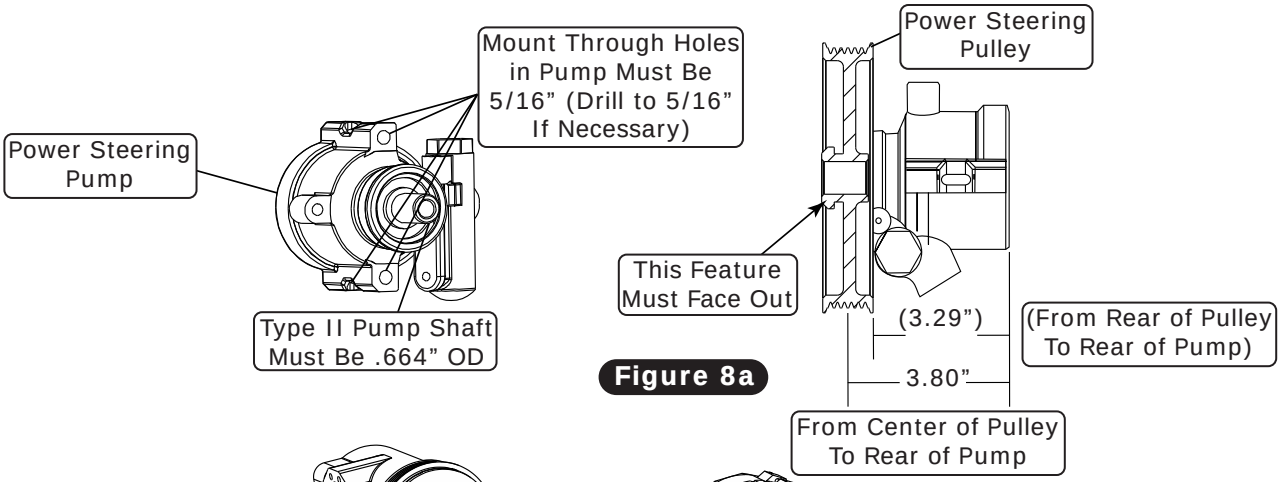


**Figure 8a**

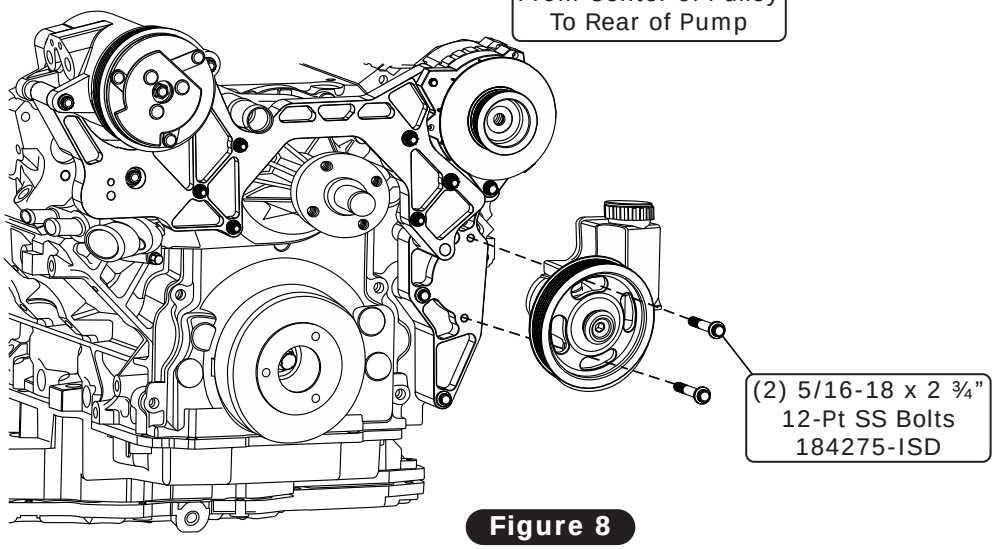


**Figure 8**

## Water Pump Pulley Installation

**1.** Install the water pump pulley onto the water pump using (4) 5/16-24 x 3/4” bolts as shown in Figure 9, below. Torque to 22 lb ft.

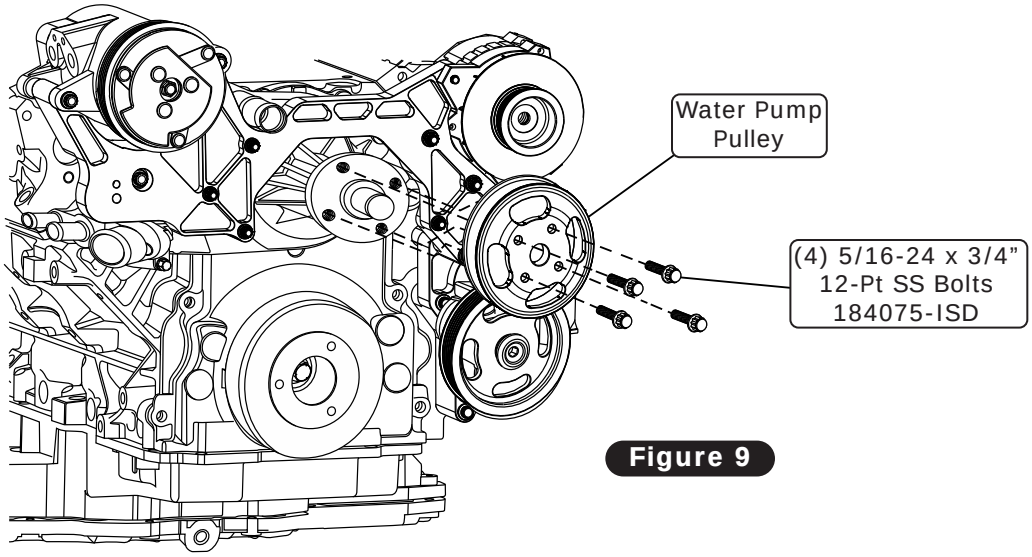


**Figure 9**

## Crankshaft Pulley Installation

**1.** Install the crankshaft pulley onto the damper using (3) 3/8-16 x 1 ¼” bolts as shown in Figure 10, below. Torque to 25 lb ft.

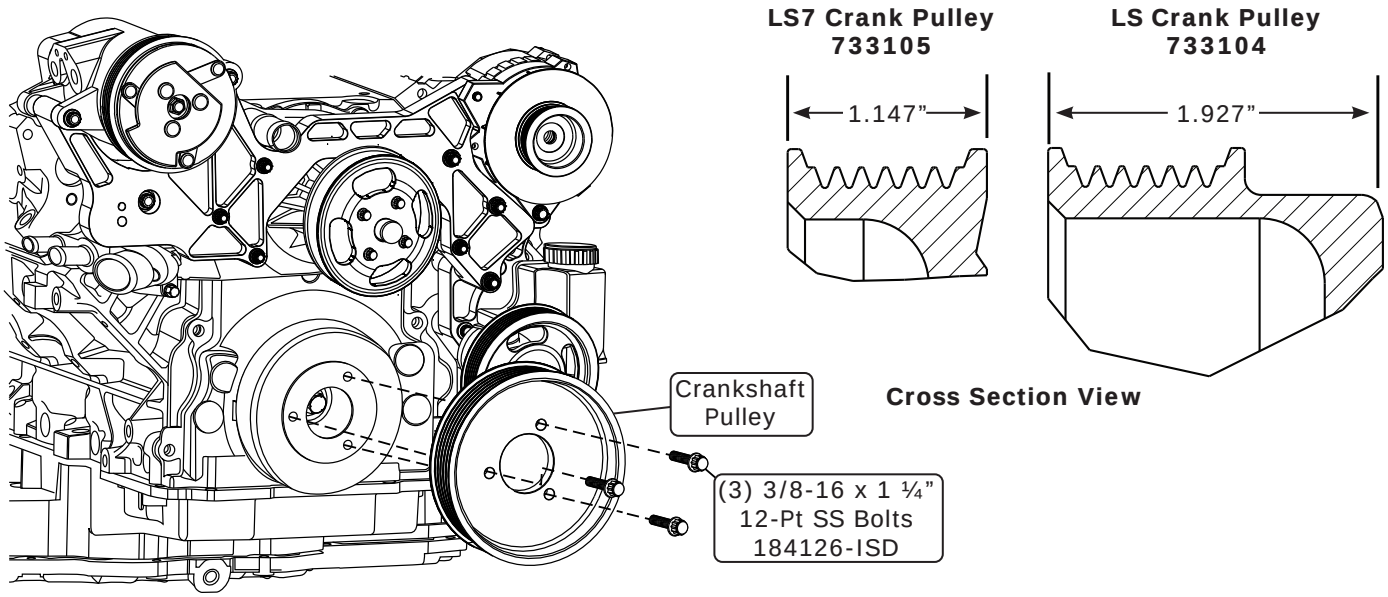


**Figure 10**

# Dowel Pin and Tensioner Spacer Installation

1. Install the .250” x 1.00” SS dowel pin into the main bracket assembly as shown in Figure 11, below. **NOTE: The dowel pin is a press fit. Use a hammer to carefully tap the dowel pin into the locating hole.**
2. Install the tensioner spacer onto the back side of the belt tensioner (See Figure 11b, below). **NOTE: Be sure to insert the dowel pin into the correct locating hole of the tensioner spacer (See Figure 11a, below). Tap the spacer onto the bracket if necessary.**
3. Align the tensioner and the tensioner spacer to the main bracket assembly, and secure using a 3/8-16 x 3 ¼” 12-Pt SS bolt as shown in Figure 11b, below. Torque to 21 ± 2 lb ft.

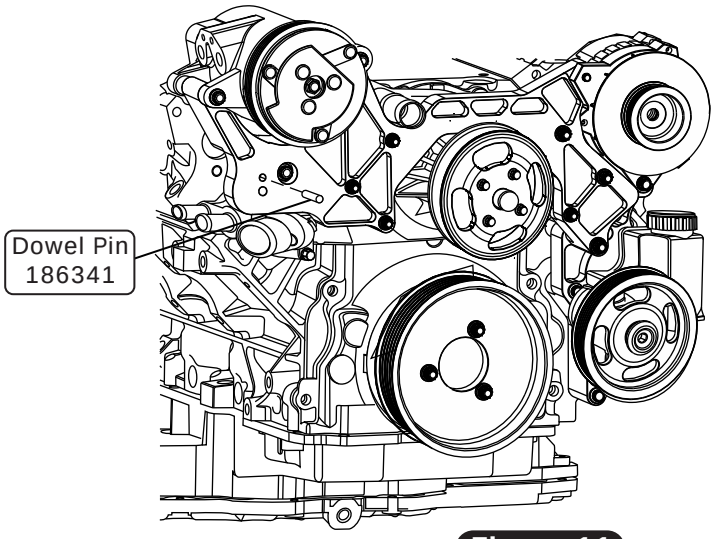


Figure 11

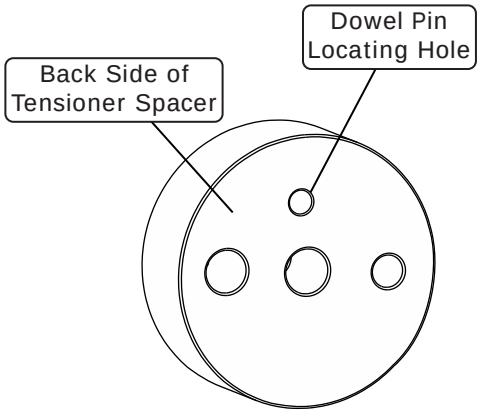


Figure 11a

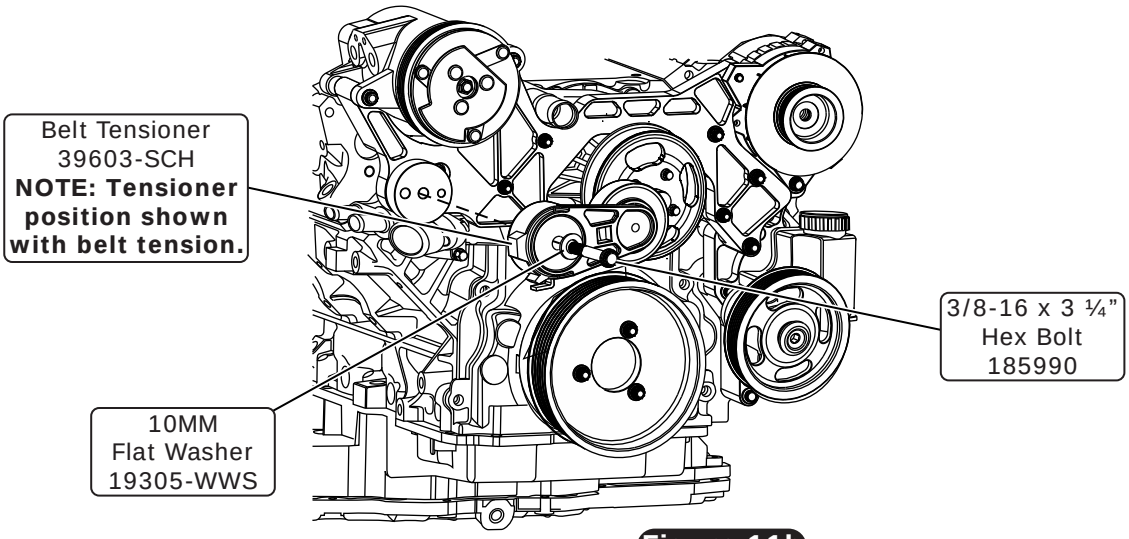


Figure 11b

## Belt Installation

1. Insert a 1/2”-drive ratchet or breaker bar into the socket on the tensioner, and rotate it clockwise to the tensioner stop. Route the belt around the crankshaft pulley, power steering pulley and alternator, and over the compressor. Finally, pull the belt down and slide it under the water pump pulley (See Figure 12, below).

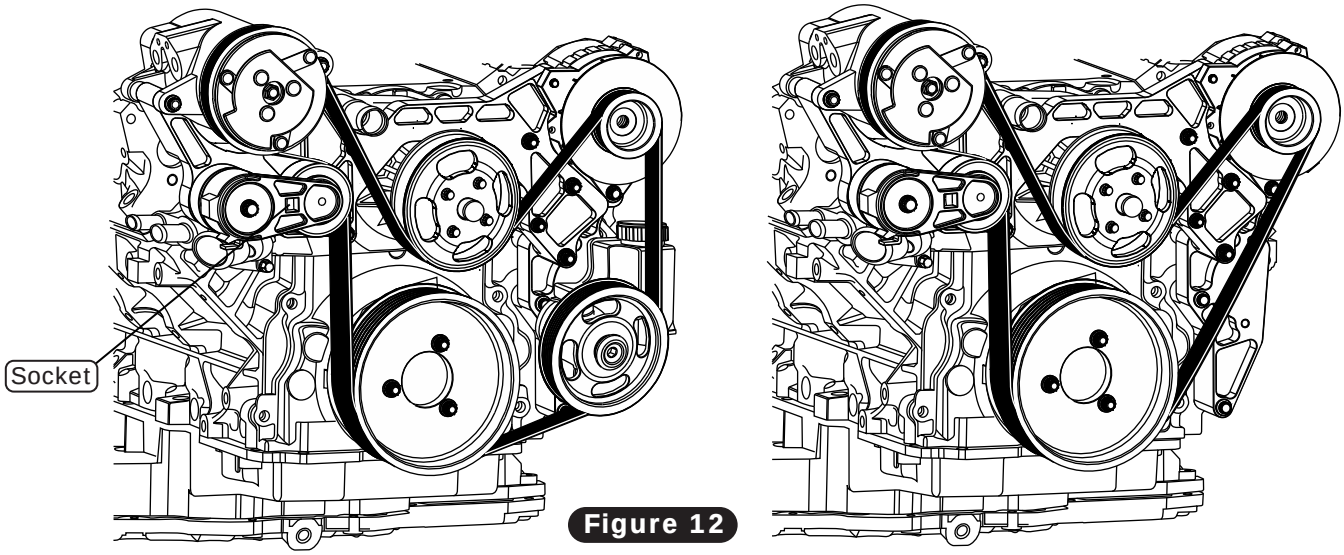


Figure 12

**66” Belt (With Power Steering)**

**63” Belt (Without Power Steering)**

## A/C Compressor Fitting Installation

1. Install the compressor block onto the compressor using (2) 8mm-1.25 x 20mm socket cap bolts as shown in Figure 13, below. Torque to 18 lb ft. **NOTE: Keep the ports sealed with caps until the A/C circuit has been completed.**

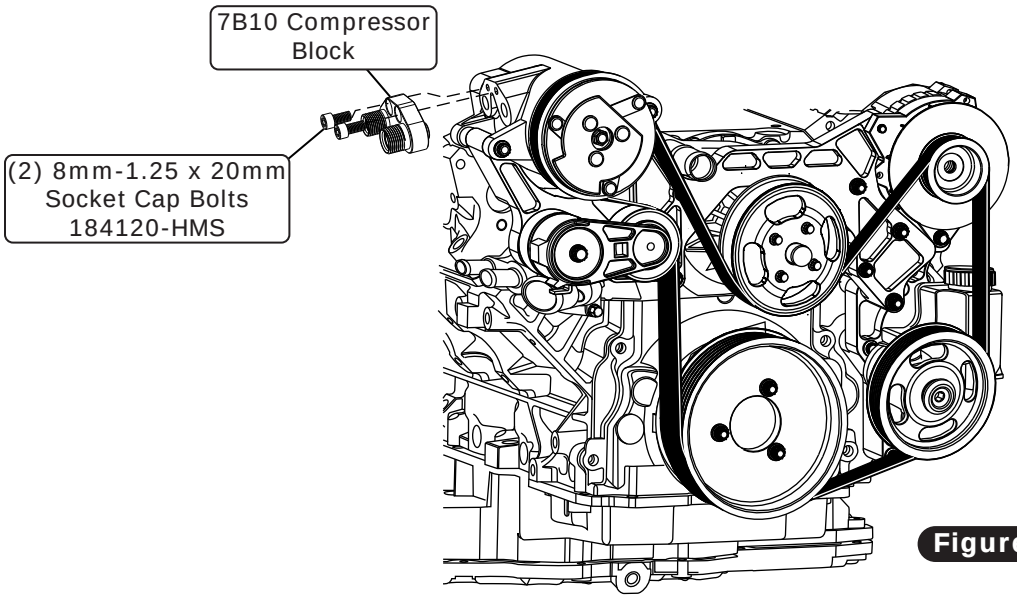


Figure 13

# Heater Hose and Radiator Hose Installation

1. Install the (2) heater hoses onto the water pump. **NOTE: The hose clamp location and position should be as shown in Figure 14, below.**
2. Install the (2) radiator hoses onto the water pump. **NOTE: The hose clamp location and position should be as shown in Figure 14, below.**

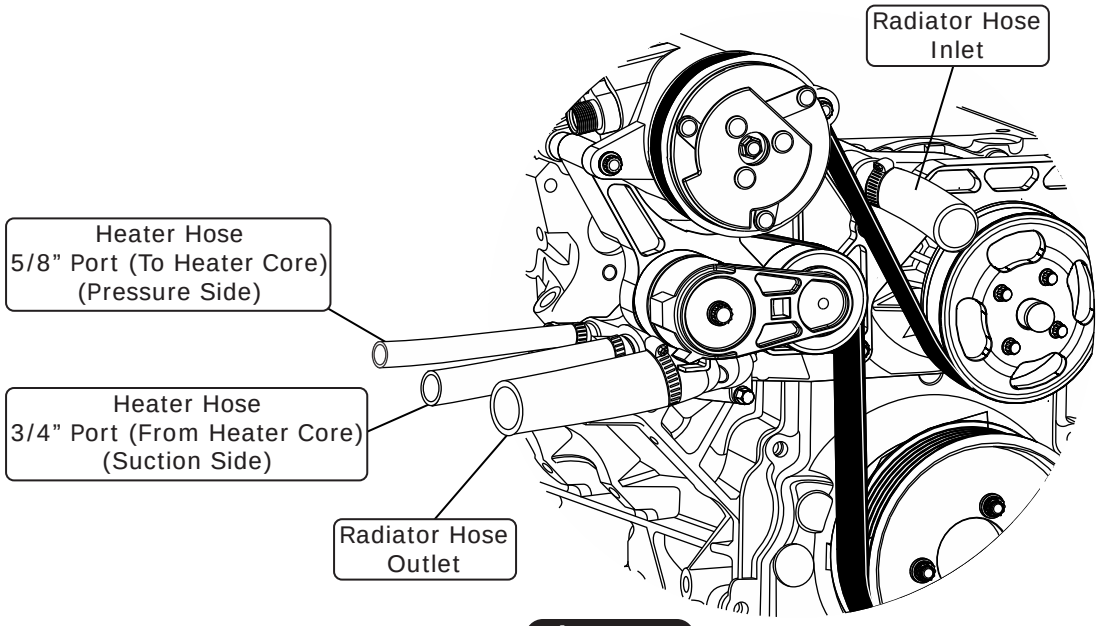


**Figure 14**

# Final Steps

1. Reinstall all previously removed items.
2. Vintage Air recommends to use a trinary safety switch with all electric engine cooling fans.
3. With a feeler gauge, ensure a minimum clearance of .060 between the top of the water pump casting and the bottom of the intake manifold. Lightly file one or both if needed.
4. Reconnect all electrical connectors. **NOTE: Charging system must be properly wired to accept one-wire internally regulated alternator.**
5. Connect negative battery cable.
6. Fill radiator with at least a 50/50 mixture of approved antifreeze and distilled water. It is the owner’s responsibility to keep the freeze protection at the proper level for the climate in which the vehicle is operated. Failure to follow antifreeze recommendations will cause heater core to corrode prematurely and possibly burst in A/C mode and/or freezing weather, voiding your warranty.
7. Double check all fittings, brackets and belts for tightness.
8. Vintage Air recommends that all A/C systems be serviced by a licensed automotive A/C technician.
9. To ensure the functionality and longevity of the power steering pump, proper bleeding of the system is required at the time of installation. See the attached document for power steering system bleeding instructions.
10. Evacuate the system for a minimum of 45 minutes prior to charging, and perform a leak check prior to servicing.
11. Charge the system to the capacities stated on Page 4 of this instruction manual.

www.vintageair.com

# Packing List:
# Polished Front Runner™ Kit (174016)
# GM LS with Power Steering, without Power Steering Pump

| No. | Qty. | Part No. | Description | |
|---|---|---|---|---|
| 1. | 1 | 172010 | Bracket, Main | |
| 2. | 1 | 174210 | Bracket, Support | |
| 3. | 1 | 733005-PFC | Pulley, Power Steering | |
| 4. | 1 | 733003-WFC | Pulley, Water Pump | |
| 5. | 1 | 39603-SCH | Tensioner | |
| 6. | 1 | 193102 | Bolt, LS Damper | |
| 7. | 1 | 733011 | Damper, Front Runner | |
| 8. | 1 | 721010 | Water Pump | |
| 9. | 1 | 046769-MTQ | Compressor, 6.1 CID Drilled Multi-Groove, Polished | |
| 10. | 1 | 040708 | Alternator, 170-Amp, Polished | |
| 11. | 1 | 199011 | Hardware Kit | |
| 12. | 1 | 180011 | Tensioner Spacer | |
| 13. | 2 | 180010 | Spacer, .297” Length | |
| 14. | 1 | 180008 | Spacer, .332” Length | |
| 15. | 1 | 39804-CUP | Tensioner Cover Assembly, Polished | |
| 16. | 1 | 04408-MCP | Clutch Cover Assembly, Polished | |
| 17. | 1 | 733102 | Pulley, Crankshaft | |
| 18. | 1 | 72660-MWR | Belt, 66” Serpentine | |
| 19. | 1 | 045005 | Compressor Block, 7B10, Polished | |
| 20. | 1 | 220013 | Alternator Cable Kit | |

Checked By: _____
Packed By: _____
Date: _____

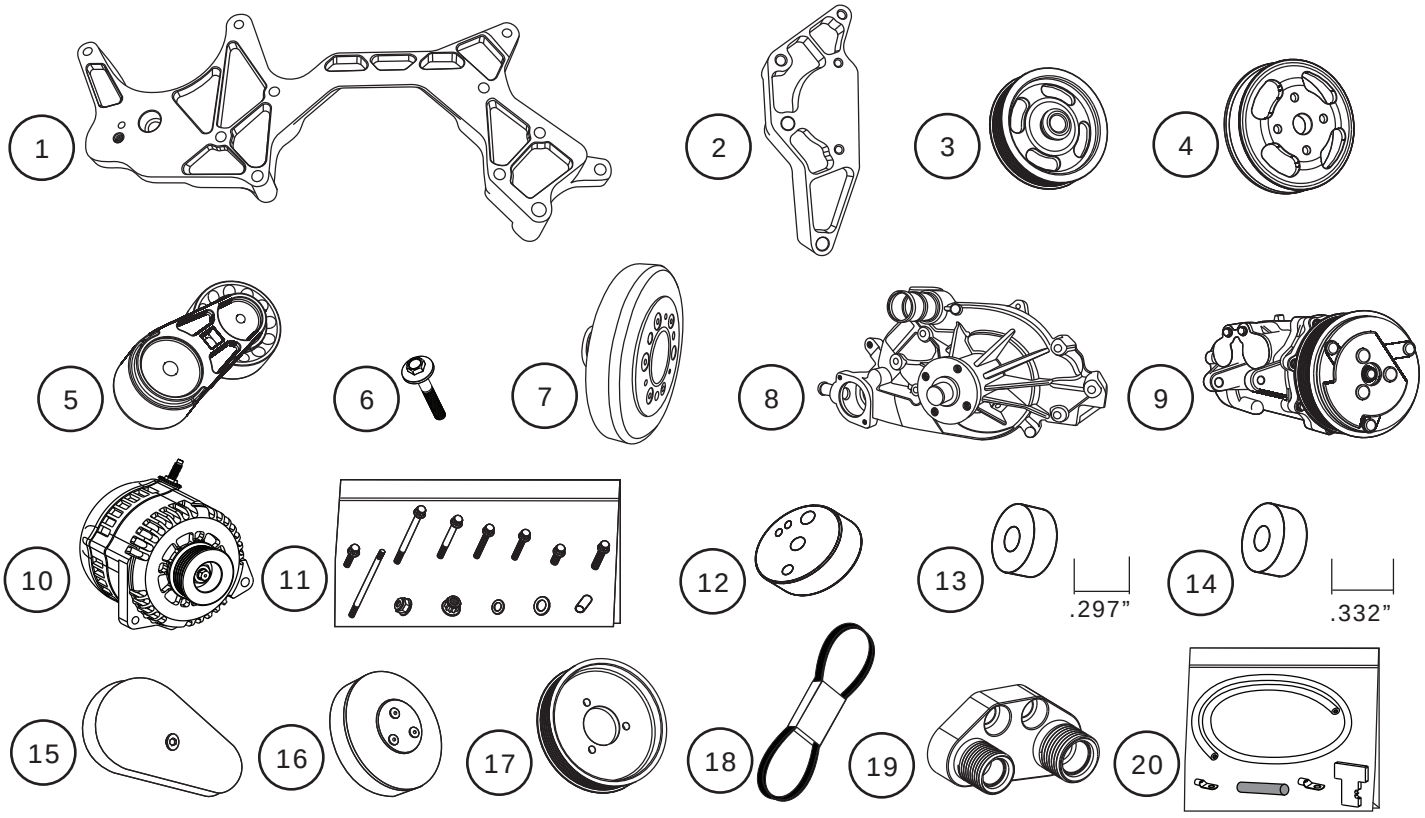


**NOTE: Images may not depict actual parts and quantities.**
**Refer to packing list for actual parts and quantities.**