ASSEMBLY INSTRUCTIONS

FOR

SMALL BEARING FORD*

***For additional vehicle compatibility, visit www.wilwood.com**

SUPERLITE/EPB (ELECTRONIC PARKING BRAKE) REAR PARKING BRAKE KIT WITH 14.00" DIAMETER VENTED ROTOR (2.50 or 2.66 OFFSET)

BASE PART NUMBER

140-16152 or 140-16156

DISC BRAKES SHOULD ONLY BE INSTALLED BY SOMEONE EXPERIENCED AND COMPETENT IN THE INSTALLATION AND MAINTENANCE OF DISC BRAKES

READ ALL WARNINGS

WARNING

IT IS THE RESPONSIBILITY OF THE PERSON INSTALLING ANY BRAKE COMPONENT OR KIT TO DETERMINE THE SUITABILITY OF THE COMPONENT OR KIT FOR THAT PARTICULAR APPLICATION. IF YOU ARE NOT SURE HOW TO SAFELY USE THIS BRAKE COMPONENT OR KIT, YOU SHOULD NOT INSTALL OR USE IT. DO NOT ASSUME ANYTHING. IMPROPERLY INSTALLED OR MAINTAINED BRAKES ARE DANGEROUS. IF YOU ARE NOT SURE, GET HELP OR RETURN THE PRODUCT. YOU MAY OBTAIN ADDITIONAL INFORMATION AND TECHNICAL SUPPORT BY CALLING WILWOOD AT (805) 388-1188, OR VISIT OUR WEB SITE AT WWW.WILWOOD.COM. USE OF WILWOOD TECHNICAL SUPPORT DOES NOT GUARANTEE PROPER INSTALLATION. **YOU**, OR THE PERSON WHO DOES THE INSTALLATION MUST KNOW HOW TO PROPERLY USE THIS PRODUCT. IT IS NOT POSSIBLE OVER THE PHONE TO UNDERSTAND OR FORESEE ALL THE ISSUES THAT MIGHT ARISE IN YOUR INSTALLATION.

RACING EQUIPMENT AND BRAKES MUST BE MAINTAINED AND SHOULD BE CHECKED REGULARLY FOR FATIGUE, DAMAGE, AND WEAR.

Need Additional Information? Use Your SmartPhone and Jump to Our Technical Tips Section on Our Web Site.

DISC BRAKES wilwood

WARNING

DO NOT OPERATE ANY VEHICLE ON UNTESTED BRAKES!

SEE MINIMUM TEST PROCEDURE WITHIN

ALWAYS UTILIZE SAFETY RESTRAINT SYSTEMS AND ALL OTHER AVAILABLE SAFETY EQUIPMENT WHILE OPERATING THE VEHICLE

IMPORTANT • READ THE DISCLAIMER OF WARRANTY INCLUDED IN THE KIT

NOTE: Some cleaners may stain or remove the finish on brake system components. Test the cleaner on a hidden portion of the component before general use.

Important Notice - Read This First

Before any tear-down or disassembly begins, review the following information:

- ***Warning: This electronic parking brake system is intended to function as a parking brake and not as an emergency stop brake. However, it is possible to actuate the EPB at any time and speed. Actuating the EPB while the vehicle is moving may cause the rear wheels to lock up and skid which may lead to a reduction in vehicle control.***
- **Review the Wheel Clearance Diagram (Figure 3, page 4) to verify that there is adequate clearance with the wheels you will be using with the installation.**
- **For the Electronic Parking Brake wiring instructions, see DS-1353 included with this kit, or download at www.wilwood.com/PDF/DataSheets/ds1353.pdf**
- **This brake kit is not supplied with hydraulic lines or fittings and may require the purchase of additional lines or fittings to complete the installation. Wilwood offers an extensive listing of brake lines and fittings on our web site: www.wilwood.com.**
- **Due to OEM production differences and other variations from vehicle to vehicle, the fastener hardware and other components in this kit may not be suitable for a specific application or vehicle.**
- **It is the responsibility of the purchaser and installer of this kit to verify suitability / fitment of all components and ensure all fasteners and hardware achieve complete and proper engagement. Improper or inadequate engagement can lead to component failure.**

Photographic Tip

Important and highly recommended: Take photos of brake system before disassembly and during the disassembly process. In the event, trouble-shooting photos can be life savers. Many vehicles have undocumented variations, photos will make it much simpler for Wilwood to assist you if you have a problem.

Parts List

ITEM NO.	PART NO.	DESCRIPTION	QTY
1	250-16161	Backing Plate, 2.50” Offset **(for kit 140-16151)**	2
1	250-16162	Backing Plate, 2.66” Offset **(for kit 140-16156)**	2
2	250-6287	Retainer, Bearing	2
3	250-15853	Bracket, Mounting, Service Caliper	2
4	230-10022	Bolt, 3/8-16 x 1.50” Long, Hex Head	4
5	240-10190	Washer, .391” I.D. x .625” O.D. x .063” Thick	4
6	240-1159	Shim, .035” Thick	16
7	240-10306	Shim, .016” Thick	4
8	250-15852	Bracket, Mounting, EPB Caliper	2
9	230-10331	Bolt, 3/8-16 x 1.75” Long, Hex Head	4
10	240-10190	Washer, .391” I.D. x .625” O.D. x .063” Thick	4
11	300-16065	Spacer, .525” Long	2
12	300-11337	Adapter, Rotor Registration	2
13	160-8402/03	Rotor, GT, 1.10” x 14.00” Dia, 12 x 8.75” Bolt Circle (right and left)	2
13A	160-8400/01-BK	Rotor, Black, SRP Drilled/Slotted (right and left)	2
14	170-15860	Hat, 5 x 4.50/4.75/5.00”, 2.035” Offset, 12 x 8.75” Bolt Circle	2
15	230-8037	Bolt, 1/4-20 x .75” Long, 12 Point	24
16	240-11240	Washer, .265” I.D. x .500” O.D. x .063” Thick	24
17	120-11782-BK	Caliper, Forged Superlite, Black	2
17A	120-11782-RD	Caliper, Forged Superlite, Red	2
18	230-16550	Nut, 3/8-24, Self-Locking, 6 Point	4
19	240-10190	Washer, .391” I.D. x .625” O.D. x .063” Thick	4
20	230-9079	Stud, 3/8-16 x 3/8-24 x 3.15” Long (pre installed in bracket)	2
21	240-1159	Shim, .035” Thick	16
22	300-7392	Spacer, .573” Long	4
23	150-8855K	Pad, BP-10 Compound, Axle Set	1
24	120-15702/03-BK	Caliper, EPB, Black (right and left hand)	2
24A	120-15702/03-RD	Caliper, EPB, Red (right and left hand)	2
25	230-15836	Bolt, 3/8-24 x .875” Long, Hex Head	4
26	240-10190	Washer, .391” I.D. x .625” O.D. x .063” Thick	4
27	300-15936	Switch, EPB, with Pigtail (not shown)	1
28	610-15588	EPB Wiring Harness, Universal (not shown)	1
29	620-15487	EPB Control Unit (not shown)	1

NOTES: Part Number 230-8008, Rotor Bolt Kit, includes P/N’s 230-8037 and 240-11240
Part Number 230-10312, Superlite Caliper Bracket Mounting Bolt Kit, includes P/N’s 230-10022, 240-1159, 240-10190 & 240-10306
Part Number 230-15861, EPB Caliper Mounting Bolt Kit, includes P/N’s 230-15836 and 240-10190
Part Number 230-15862, EPB Caliper Bracket Mounting Bolt Kit, includes P/N’s 230-10331, 240-10190 and 300-16065
Part Number 250-15855, Superlite Caliper Bracket Kit, includes P/N’s 230-9079, 230-16550, 240-1159, 240-10190, 250-15853 & 300-7392
Item 13A is an optional item and is included in the “-D” drilled rotor kits. Add ”-D” to end of part number when ordering.
Items 17A and 24A are optional items and included in the “-R” red caliper kits. Add “-R” to end of part number when ordering.

Exploded Assembly Diagram

WARNING
INSTALLATION OF THIS KIT SHOULD **ONLY** BE PERFORMED BY PERSONS EXPERIENCED IN THE INSTALLATION AND PROPER OPERATION OF DISC BRAKE SYSTEMS.

NOTE
SPECIFIC PARTS MAY VARY FROM DIAGRAM

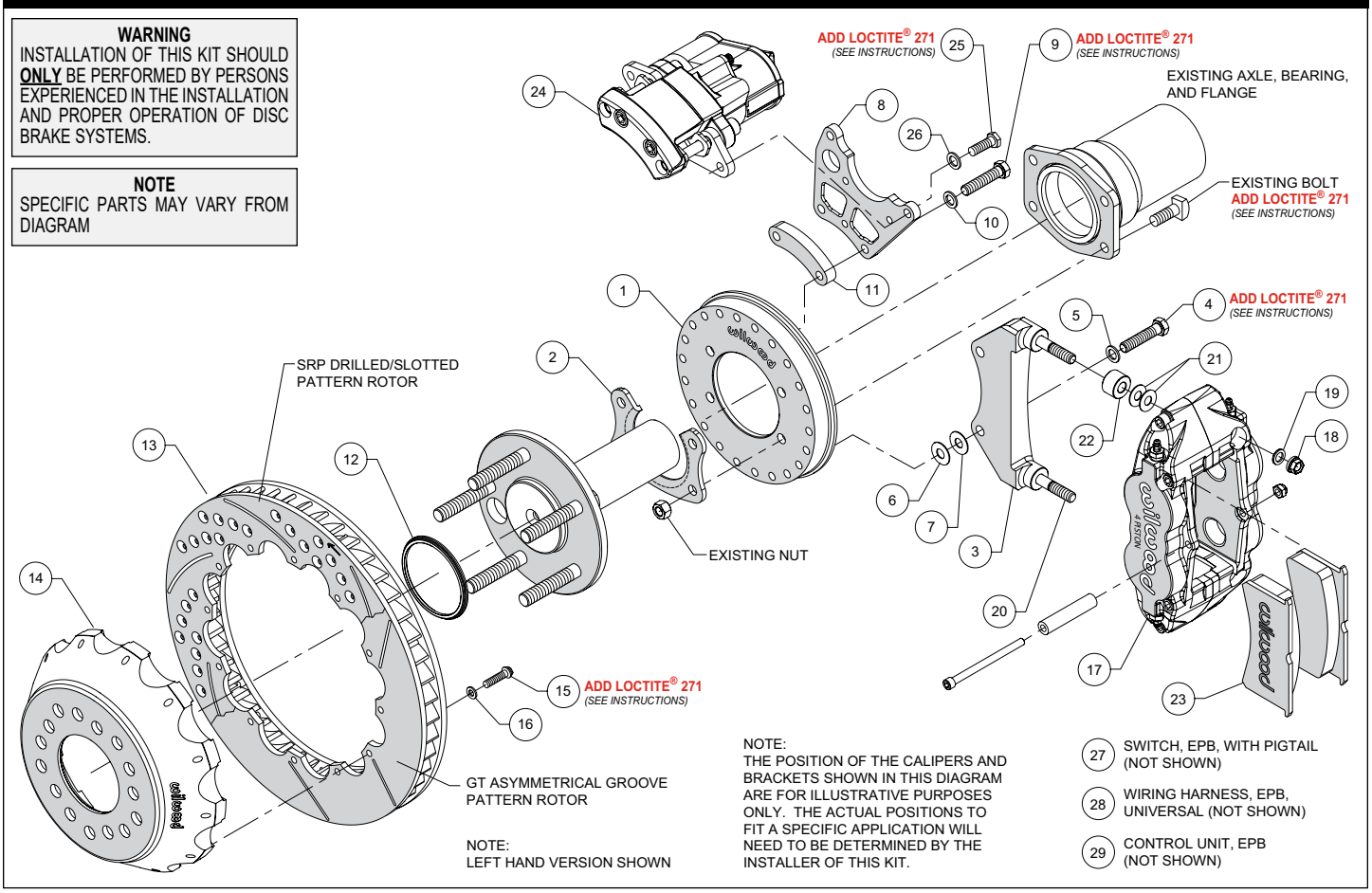

Figure 1. Typical Installation Configuration

General Information

- *Installation of this kit should **ONLY** be performed by persons experienced in the installation and proper operation of disc brake systems. Before assembling this Wilwood disc brake kit, double check the following to ensure a trouble free installation.*

- Inspect the contents of this kit against the parts list to ensure that all components and hardware are included.

- Make sure this is the correct kit to fit the axle housing flange, not necessarily the rear end make. Many times aftermarket manufacturers put a different make of axle housing flange on the stock rear end housing (Figure 6). Example; Big Ford rear ends with Olds-Pontiac flanges, therefore, an Olds-Pontiac rear disc brake kit would be the correct kit to order.

- Verify your wheel clearance using Figure 3.

This kit includes a 3.06" center I.D. hat or rotor assembly and a 2.80" hub register adapter ring to accommodate the installation of this kit on axles of either dimension. For axles with different center register diameters, please consult the table below for optional adapter ring sizes.

PART NO.	REGISTER I.D.	NOTE
NO ADAPTER USED	3.06"	ROTOR CENTER HOLE I.D.
300-13328	2.88"	OPTIONAL
300-11732	2.86"	OPTIONAL
300-11962	2.84"	OPTIONAL
300-11338	2.82"	OPTIONAL
300-11337	2.80"	SUPPLIED WITH KIT
300-13506	2.79"	OPTIONAL
300-11532	2.78"	OPTIONAL
300-16434	2.75"	OPTIONAL
300-11803	2.52"	OPTIONAL
300-11901	2.50"	OPTIONAL
300-12761	2.44"	OPTIONAL
300-11653	2.18"	OPTIONAL
300-11339	2.00"	OPTIONAL (Machine to fit I.D.)

Table 1. Center Register Adapters

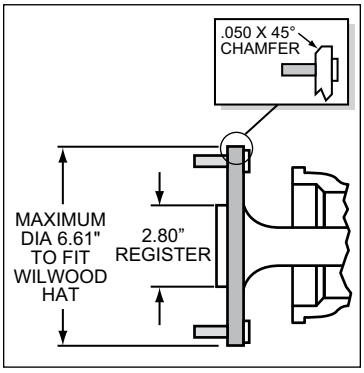

Figure 2. Axle Flange Maximum Dimension

General Information (Continued) and Disassembly Instructions

•**Verify The Following Measurements Before Assembly.**

- Bearing outside diameter, 3.84.
- Axle housing flange mounting pattern to pattern in bracket.
- Stud pattern on axle flange to stud pattern in hat.
- Axle center register diameter is 2.80”, Figure 2. This kit uses Wilwood’s removable center register adapters. Rotors can either be centered on the axle register, i.e. *register-centric* or centered on the wheel studs, i.e. *stud-centric.* Due to variations in wheel stud final diameters, *register-centric* centering can be a more accurate method of centering the rotor to the axle. Wilwood offers various diameter adapters for purchase in addition to the ones supplied in this kit, see Table 1.
- Dimension from wheel side of axle flange to wheel side of axle housing flange (see Figure 6, lower right hand corner). This dimension is critical to ensure proper alignment of the rotor to the caliper, and should match offset given in the kit description.
- The Wilwood hat utilized in this kit is drilled for 1/2” diameter wheel studs. ***NOTE:*** *Some OEM axles have 7/16” (0.44”) wheel axle studs.* It is recommended that you upgrade to 1/2” studs. Dependent on the type of axle, this may be a simple stud change, or may require the services of a machine shop to perform.
- Maximum axle flange diameter must be no larger than 6.61” w/.050” x 45° chamfer, Figure 2.

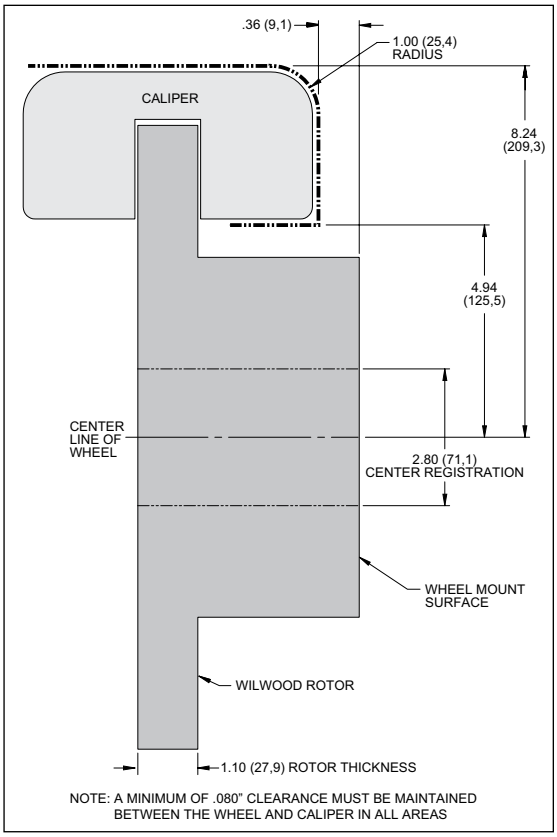

Figure 3. Wheel Clearance Diagram

Disassembly Instructions:

•Disassemble the original equipment rear brakes:

Raise the rear wheels off the ground and support the rear suspension according to the vehicle manufacturer’s instructions.

Remove the rear wheels and disassemble the drum brake assembly down to the bare axle.

Remove the stock bearing retainers from the axles. Save the mounting bolt and nut for use during assembly

- Remove any nicks or burrs on the axle housing flange, as well as the axle flange, that may interfere with the installation of the new brake components.

- Clean and de-grease the axle, the axle housing flange, and saved hardware.

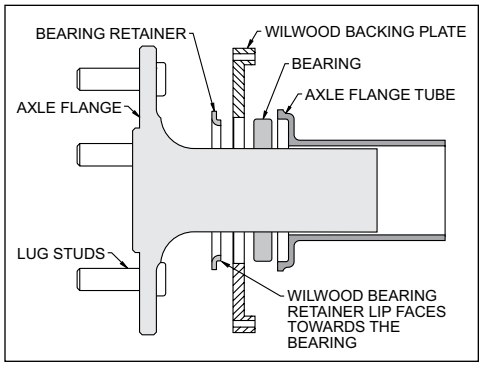

Figure 4. Retainer / Axle Diagram

Assembly Instructions

Assembly Instructions
(numbers in parenthesis refer to the parts list, and Figure 1 on the preceding pages):

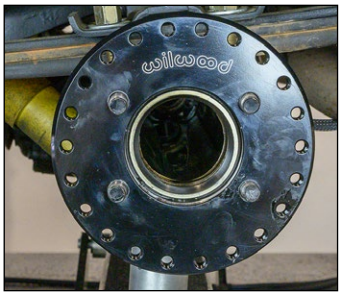

Photo 1

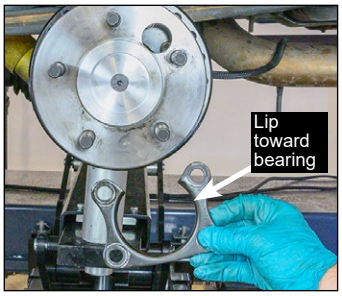

Photo 2

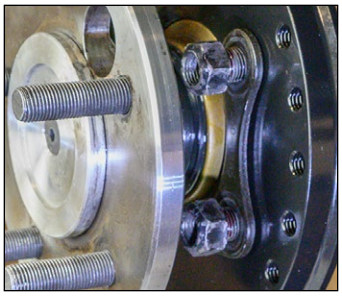

Photo 3

•Orient the backing plate (1) as shown in Figure 1 and Photo 1, and slide it onto the axle housing flange. Ensure the backing plate fits flush against the axle housing flange. Reinstall the axle into the axle housing.

•Install the bearing retainer (2) with the opening pointing upward and the lip facing inward (toward the bearing), as shown in Figures 1 and 4, and Photo 2. Secure retainer and backing plate to the axle housing flange using the Original Equipment Manufacturer (OEM) bolts and nuts, Figure 1 and Photo 3. Apply red *Loctite*® 271 to the OEM bolt threads and torque to OEM specifications.

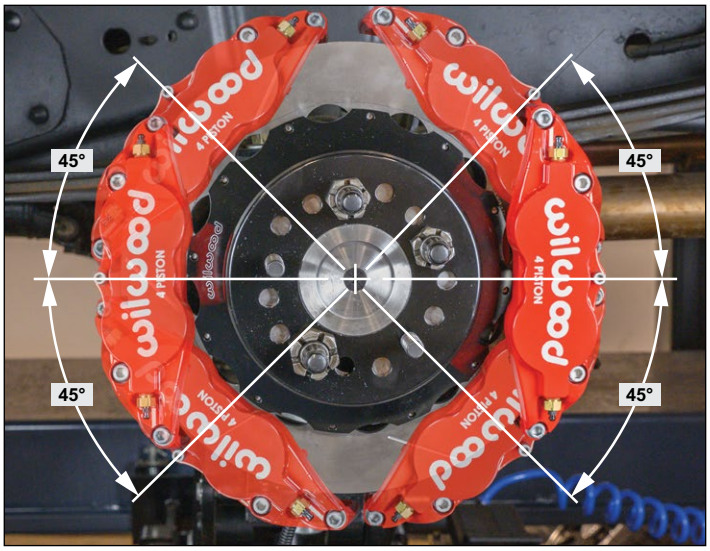

Photo 4

Determining Caliper Mounting Locations

•This brake kit allows the service caliper and EPB caliper to be mounted in dozens of position combinations around the axle to best suit each individual application. ***NOTE:*** *The position of the calipers and brackets in these photos are for illustrative purposes only. The actual positions to fit a specific application will need to be determined by the installer of this kit.*

•***NOTE: It is the installers responsibility to ensure the calipers have sufficient clearance to all surrounding components through the full range of suspension travel.*** Examples of components that may interfere with the calipers include shocks, springs, frame rails, traction bars, sway bars, etc.

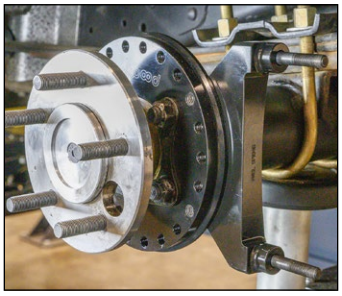

Photo 5

•Initial test fitting to determine caliper locations should be done with clean, dry threads on the bracket and caliper mounting bolts. Later, after the location and alignment of the calipers has been checked, the mount bolts will be secured using red *Loctite*® 271.

•Start by determining the best location for the service caliper (17). This caliper is usually mounted in the 3:00 or 9:00 o'clock position, but may be rotated up or down approximately 45 degrees and still allow for proper bleeding, Photo 4. Orient the service caliper bracket (3) as shown in Figure 1 and Photo 5, and install to the backing plate (1) in the desired location using bolts (4) and washers (5). Temporarily tighten bolts. Next, mount the service caliper onto the bracket. Mount the service caliper using lock nuts (18) and washers (19), Figure 1. Temporarily tighten the lock nuts. Check that the caliper (including inlet fitting and hose) has sufficient clearance to all surrounding components through the full suspension travel. Relocate the caliper/bracket on the backing plate as needed to ensure proper clearance is achieved.

•Determine the best location for the EPB caliper (24). ***NOTE:*** *The EPB caliper motor extends farther inboard than the service caliper and therefore needs additional consideration when determining a mounting location with sufficient clearance.* In the example application shown in Photo 6, the EPB caliper has sufficient inboard clearance to the leaf spring. However, if the EPB caliper were mounted closer to the 12:00 o'clock position, the inner body of the vehicle would hit the caliper during full compression of the suspension.

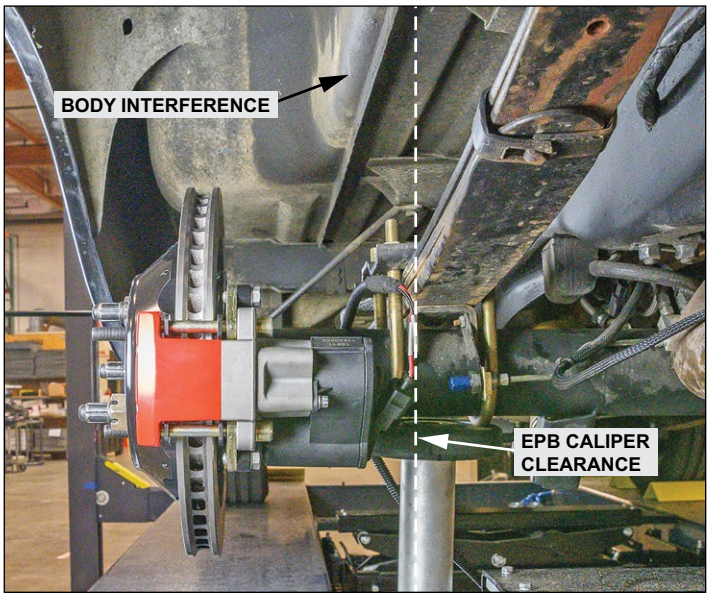

Photo 6 (Example Application Shown)

•Orient the EPB caliper bracket (8) as shown in Figure 1 and Photo 7, and install to the backing plate (1) in the desired location using bolts (9), washers (10), and spacer (11). Temporarily tighten bolts. ***NOTE:*** *The EPB bracket is reversible. In one direction the bracket will position the EPB caliper closer to the service caliper, and vice versa if reversing the bracket.* Next, mount the EPB caliper (24) to the bracket using bolts (25) and washers (26). Temporarily tighten bolts. ***NOTE:*** *EPB calipers are Left and Right handed, however they can be used on either side of the vehicle to best suit your specific application.* Check that the EPB caliper (including wiring harness connector) has sufficient clearance to all surrounding components through the full suspension travel. Relocate the EPB caliper/bracket on the backing plate as needed to ensure proper clearance is achieved.

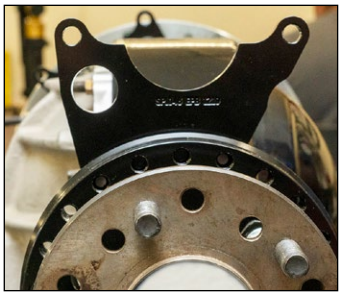

Photo 7

Photo 8

Assembly Instructions Continued

•Once the caliper positions have been determined, remove both the service (17) and EPB (24) calipers, leaving both brackets in place on the backing plate. For the EPB bracket, remove the bolts one at a time, apply red Loctite® 271 to the threads, and torque to 35 ft-lb. The service caliper bracket will be final installed after shimming is determined.

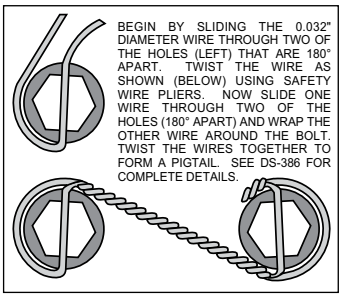

Figure 5. Safety Wire Diagram

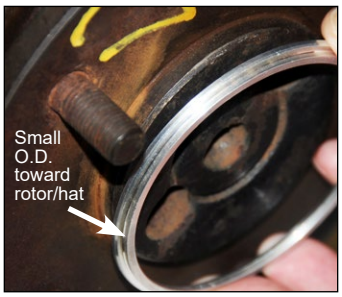

Photo 9

•Orient the rotor (13) and the hat (14) as shown in Figure 1 and Photo 8. Attach rotor to hat using bolts (15) and washers (16). Apply red *Loctite*® 271 to the bolt threads and torque to 155 **in-lb** using a criss-cross pattern. For an added measure of security, the bolts may be safety wired using standard 0.032 inch diameter stainless steel safety wire as shown in Figure 5. Please refer to Wilwood's data sheet DS-386 (available at www.wilwood.com/Pdf/DataSheets/ds386.pdf) for complete safety wire installation instructions.

•Slide the rotor registration adapter (12) onto the register on the axle flange with the smaller O.D. facing toward the rotor/hat (13 and 14), Photo 9.

•Slide the hat/rotor (14 and 13) assembly onto the axle flange. ***NOTE:*** *The hat must fit flush against the axle flange or excessive rotor run out may result.* Install three lug nuts (finger tight) to keep the rotor/hat assembly in place while continuing with the installation. ***NOTE:*** *Some OEM and after market axles come with stud sizes larger than 0.50" diameter. Verify stud size and have a qualified machine shop drill the bolt circle of the hat/rotor to the correct stud size, if necessary.*

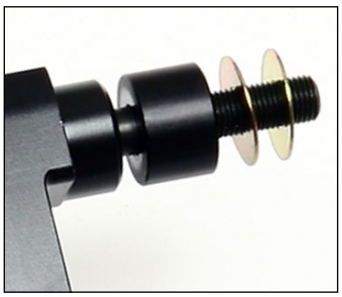

Photo 10

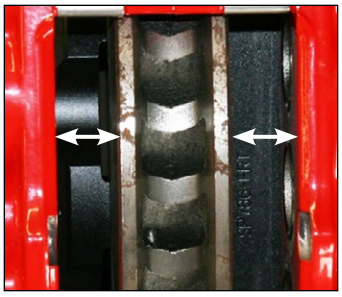

Photo 11

Photo 12

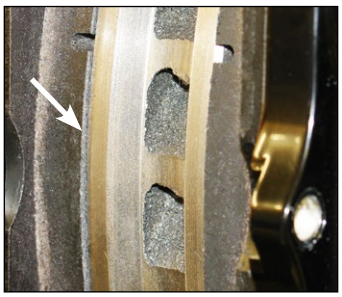

Photo 13

•Initially place two .035" thick shims (21) and one spacer (22) on each stud of the service caliper bracket (3) as shown in Figure 1 and Photo 10. Mount the caliper onto the bracket using lock nuts (18) and washers (19), Figure 1. Temporarily tighten the lock nuts and view the rotor through the top opening of the caliper. The rotor should be centered in the caliper, Photo 11. If not, adjust by adding or subtracting shims (6 and/or 7)) between the service caliper bracket (3) and the backing plate (1). Always use the same amount of shims on each of the two mounting bolts. Once the caliper alignment is correct, remove the bracket mounting bolts (4) one at a time, apply red *Loctite*® 271 to the threads, and torque bolts to 35 ft-lb.

Assembly Instructions (Continued)

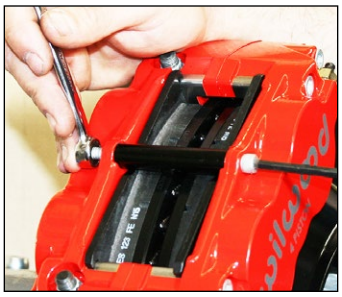

Photo 14

•Remove the caliper center bridge pad retainer bolt, nut, and tube from the caliper. Insert the brake pads (23) into the caliper, with the friction material facing the rotor, as shown in Photo 12. Check that the top of the brake pad is flush with the outside diameter of the rotor, Photo 13. If not, adjust by adding or subtracting shims (21) between the caliper (17) and the spacer (22). After the caliper pad height is set, torque the caliper lock nuts (18) to 30 ft-lb. Secure the brake pads in place with the center bridge pad retainer tube, bolt, and locknut, Photo 14. The locknut should be snug without play in the bolt or tube. Be cautious not to over tighten.

•Mount the EPB caliper (24) onto the caliper mounting bracket (8) using bolts (25) and washers (26), Figure 1. Apply red *Loctite*® 271 to bolt threads, and torque to 30 ft-lb.

•Temporarily install wheel and torque lug nuts to manufacturer's specification. Ensure that the wheel rotates freely without any interference.

•***NOTE**: The service caliper (17) in this brake kit utilizes a 1/8-27 NPT pipe thread inlet. OEM rubber brake hoses generally cannot be adapted to Wilwood calipers.* The preferred method is to use steel adapter fittings at the caliper, either straight, 45 or 90 degree (use PTFE tape on pipe threads of adapter fitting for proper sealing to caliper) and enough steel braided line to allow for full suspension travel. **Carefully route hoses to prevent contact with moving suspension, brake or wheel components.** ***NOTE:** Wilwood hose kits are designed for use in many different vehicle applications and it is the installer's responsibility to properly route and ensure adequate clearance and retention for brake hose components.* Wilwood offers universal brake flex line hose kits, domestic (3/8-24 IF) chassis fittings, order:

P/N 220-7056 for the 14 inch length domestic, 3/8-24 IF
P/N 220-7699 for the 16 inch length domestic, 3/8-24 IF
P/N 220-8307 for the 18 inch length domestic, 3/8-24 IF
P/N 220-11238 for the 20 inch length domestic, 3/8-24 IF
P/N 220-11237 for the 22 inch length domestic, 3/8-24 IF

Hose kits include hoses, fitting, etc., all in one package for this application.

•***NOTE:** Specified brake hose kits may not work with all Years, Makes and Models of vehicle that this brake kit is applicable to, due to possible OEM manufacturing changes during a production vehicle's life.* It is the installer's responsibility to ensure that all fittings and hoses are the correct size and length, to ensure proper sealing and that they will not be subject to crimping, strain and abrasion from vibration or interference with suspension components, brake rotor or wheel.

•In absence of specific instructions for brake line routing, the installer must use his best professional judgment on correct routing and retention of lines to ensure safe operation. Test vehicle brake system per the 'minimum test' procedure stated within this document before driving. After road testing, inspect for leaks and interference. Initially after install and testing, perform frequent checks of the vehicle brake system and lines before driving, to confirm that there is no undue wear or interference not apparent from the initial test. Afterwards, perform periodic inspections for function, leaks and wear in a interval relative to the usage of vehicle.

• Bleed the brake system, referring to the additional information and recommendations on page 9 for proper bleeding instructions. Check system for leaks after bleeding.

• Install the wheel and torque lug nuts to manufacturer's specification.

• Bed-in the brake pads per the procedure on page 10.

• ***NOTE:** For the Electronic Parking Brake wiring instructions, see DS-1353 included with this kit, or download at* www.wilwood.com/PDF/DataSheets/ds1353.pdf

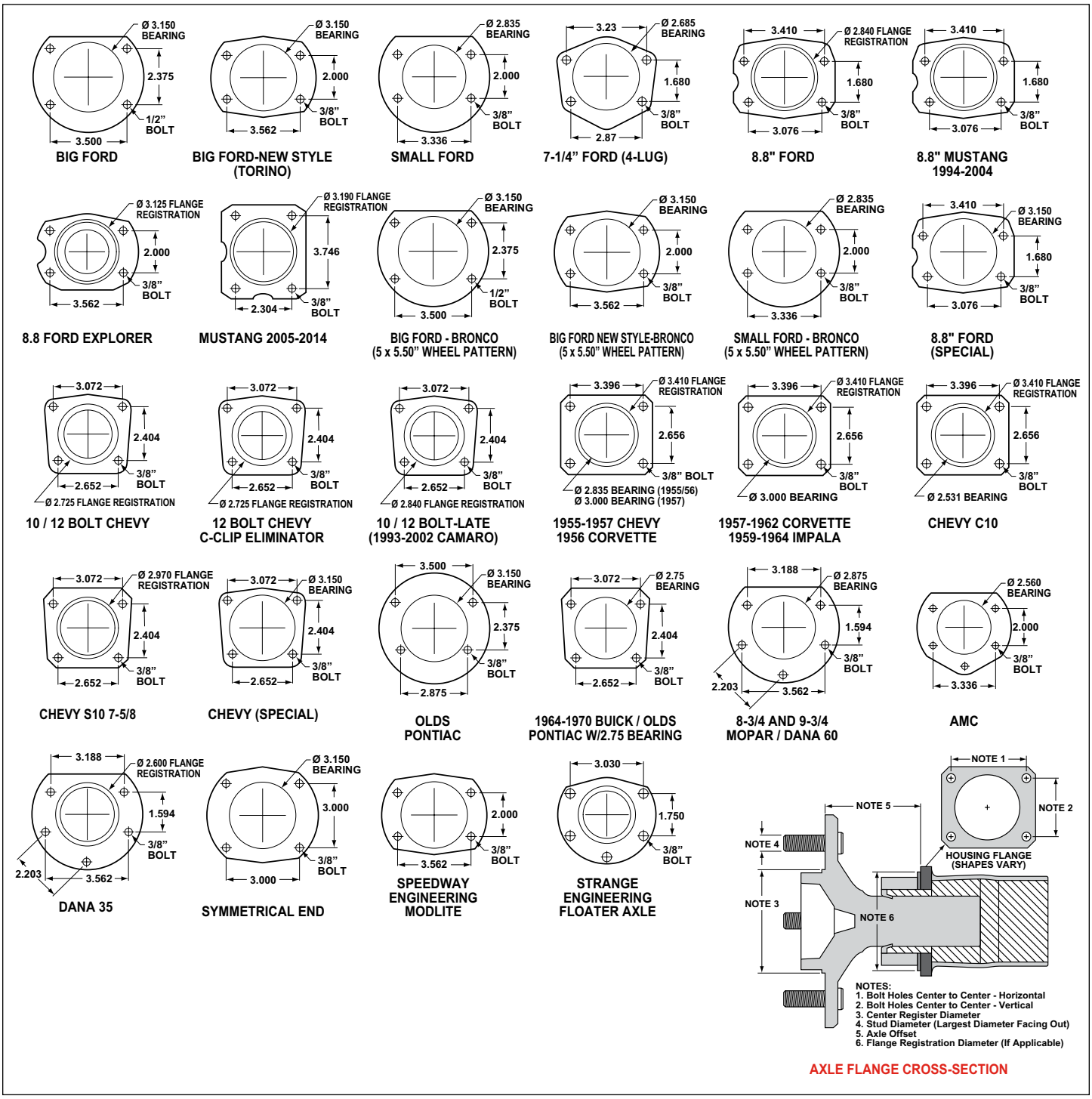

Figure 6. Rear Housing Flange Chart and Axle Flange / Offset Cross-Section

Additional Information and Recommendations

•Fill and bleed the new system with Wilwood Hi-Temp° 570 grade fluid or higher. For severe braking or sustained high heat operation, use Wilwood EXP 600 Plus Racing Brake Fluid. Used fluid must be completely flushed from the system to prevent contamination. ***NOTE:*** *Silicone DOT 5 brake fluid is* ***NOT*** *recommended for racing or performance driving*.

•To properly bleed the brake system, begin with the caliper farthest from the master cylinder. Bleed the outboard bleed screw first, then the inboard. Repeat the procedure until all calipers in the system are bled, ending with the caliper closest to the master cylinder. ***NOTE:*** *When using a new master cylinder, it is important to bench bleed the master cylinder first.*

•If the master cylinder is mounted lower than the disc brake calipers, some fluid flowback to the master cylinder reservoir may occur, creating a vacuum effect that retracts the caliper pistons into the housing. This will cause the pedal to go to the floor on the first stroke until it has "pumped up" and moved all the pistons out against the pad again. A Wilwood in-line two pound residual pressure valve, installed near the master cylinder will stop the fluid flowback and keep the pedal firm and responsive.

•Test the brake pedal. It should be firm, not spongy and stop at least 1 inch from the floor under heavy load.

If the brake pedal is spongy, bleed the system again.

If the brake pedal is initially firm, but then sinks to the floor, check the system for fluid leaks. Correct the leaks (if applicable) and then bleed the system again.

If the brake pedal goes to the floor and continued bleeding of the system does not correct the problem, a master cylinder with increased capacity (larger bore diameter) will be required. Wilwood offers various lightweight master cylinders with large fluid displacement capacities.

•***NOTE:*** *With the installation of after market disc brakes, the wheel track may change depending on the application.* Check your wheel offset before final assembly.

•If after following the instructions, you still have difficulty in assembling or bleeding your Wilwood disc brakes, consult your local chassis builder, or retailer where the kit was purchased for further assistance.

Brake Testing

WARNING • DO NOT DRIVE ON UNTESTED BRAKES
BRAKES MUST BE TESTED AFTER INSTALLATION OR MAINTENANCE
MINIMUM TEST PROCEDURE

- Make sure pedal is firm: Hold firm pressure on pedal for several minutes, it should remain in position without sinking. If pedal sinks toward floor, check system for fluid leaks. DO NOT drive vehicle if pedal does not stay firm or can be pushed to the floor with normal pressure.
- At very low speed (2-5 mph) apply brakes hard several times while turning steering from full left to full right, repeat several times. Remove the wheels and check that components are not touching, rubbing, or leaking.
- Carefully examine all brake components, brake lines, and fittings for leaks and interference.
- Make sure there is no interference with wheels or suspension components.
- Drive vehicle at low speed (15-20 mph) making moderate and hard stops. Brakes should feel normal and positive. Again check for leaks and interference.
- Always test vehicle in a safe place where there is no danger to (or from) other people or vehicles.
- Always wear seat belts and make use of all safety equipment.

Pad and Rotor Bedding

BEDDING STEPS FOR NEW PADS AND ROTORS – ALL COMPOUNDS

Once the brake system has been tested and determined safe to operate the vehicle, follow these steps for the bedding of all new pad materials and rotors. These procedures should only be performed on a race track, or other safe location where you can safely and legally obtain speeds up to 65 MPH, while also being able to rapidly decelerate.

- Begin with a series of light decelerations to gradually build some heat in the brakes. Use an on-and-off the pedal technique by applying the brakes for 3-5 seconds, and then allow them to fully release for a period roughly twice as long as the deceleration cycle. If you use a 5 count during the deceleration interval, use a 10 count during the release to allow the heat to sink into the pads and rotors.
- After several cycles of light stops to begin warming the brakes, proceed with a series of medium to firm deceleration stops to continue raising the temperature level in the brakes.
- Finish the bedding cycle with a series of 8-10 hard decelerations from 55-65 MPH down to 25 MPH while allowing a proportionate release and heat-sinking interval between each stop. The pads should now be providing positive and consistent response.
- If any amount of brake fade is observed during the bed-in cycle, immediately begin the cool down cycle.
- Drive at a moderate cruising speed, with the least amount of brake contact possible, until most of the heat has dissipated from the brakes. Avoid sitting stopped with the brake pedal depressed to hold the car in place during this time. Park the vehicle and allow the brakes to cool to ambient air temperature.

COMPETITION VEHICLES

- If your race car is equipped with brake cooling ducts, blocking them will allow the pads and rotors to warm up quicker and speed up the bedding process.
- Temperature indicating paint on the rotor and pad edges can provide valuable data regarding observed temperatures during the bedding process and subsequent on-track sessions. This information can be highly beneficial when evaluating pad compounds and cooling efficiencies.

POST-BEDDING INSPECTION – ALL VEHICLES

- After the bedding cycle, the rotors should exhibit a uniformly burnished finish across the entire contact face. Any surface irregularities that appear as smearing or splotching on the rotor faces can be an indication that the brakes were brought up to temperature too quickly during the bedding cycle. If the smear doesn't blend away after the next run-in cycle, or if chatter under braking results, sanding or resurfacing the rotors will be required to restore a uniform surface for pad contact.

PRE-RACE WARM UP

- Always make every effort to get heat into the brakes prior to each event. Use an on-and-off the pedal practice to warm the brakes during the trip to the staging zone, during parade laps before the flag drops, and every other opportunity in an effort to build heat in the pads and rotors. This will help to ensure best consistency, performance, and durability from your brakes.

DYNO BEDDED COMPETITION PADS AND ROTORS

- Getting track time for a proper pad and rotor bedding session can be difficult. Wilwood offers factory dyno-bedded pads and rotors on many of our popular competition pads and ***Spec 37*** GT series rotors. Dyno-bedded parts are ready to race on their first warm up cycle. This can save valuable time and effort when on-track time is either too valuable or not available at all, Dyno-bedding assures that your pads and rotors have been properly run-in and are ready to go. Contact your dealer or the factory for more information on Wilwood Dyno-Bedding services.

NOTE: *NEVER allow the contact surfaces of the pads or rotors to be contaminated with brake fluid. Always use a catch bottle with a hose to prevent fluid spill during all brake bleeding procedures.*

Parking Brake

WARNING • PARKING BRAKE

- The holding ability of the brake should be tested by stopping on a sloping surface and applying the parking brake while holding car with the hydraulic foot brake. This should be accomplished both facing up and down hill.
- Do not rely exclusively on the parking brake to hold the car; Curb wheels as recommended by the applicable diagram and put gear selector in park, or shift into first gear or reverse with a manual transmission.

- Diagram A - When parking facing downhill, turn front wheels towards the curb or right shoulder. This will keep from rolling into traffic if the brakes become disengaged.
- Diagram B - Turn the steering wheel to the left so the wheels are turned towards the road if you are facing uphill with a curb. The tires will catch the curb if the car rolls backward.
- Diagram C - When facing uphill without a curb, turn the wheels sharply to the right. If the vehicle rolls, it will go off the road rather than into traffic.
- When parking on a hill, always set the parking brake and move the gear selector into park, or shift into first or reverse gear if your vehicle has a manual transmission.

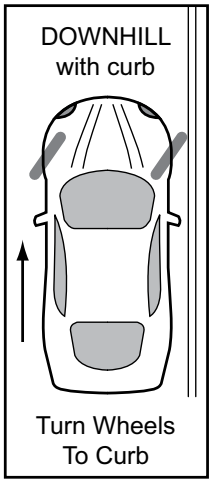

Diagram A

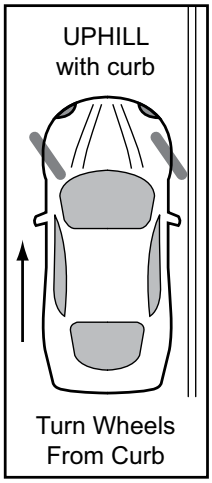

Diagram B

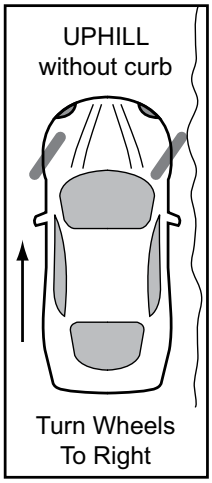

Diagram C

Connect with Wilwood

Wilwood Facebook Wilwood Instagram Wilwood Twitter Wilwood YouTube

Associated Components

PART NO.	DESCRIPTION
260-13706	Wilwood Residual Pressure Valve (2 lb for disc brakes)
260-13707	Wilwood Residual Pressure Valve (10 lb for drum brakes)
260-8419	Wilwood Proportioning Valve, Knob Style
260-8420	Wilwood Proportioning Valve, Lever Style
260-11179	Wilwood Combination Proportioning Valve with Brake Light Switch
290-0632	Wilwood Racing Brake Fluid (Hi-Temp° 570) (12 oz)
290-6209	Wilwood Racing Brake Fluid (EXP 600 Plus) (16.9 oz)
340-13831	Wilwood Floor Mount Brake Pedal (with balance bar)
340-13832	Wilwood Swing Mount Brake Pedal (with balance bar)
260-6764	Wilwood 3/4 inch High Volume Aluminum Master Cylinder
260-6765	Wilwood 7/8 inch High Volume Aluminum Master Cylinder
260-6766	Wilwood 1 inch High Volume Aluminum Master Cylinder
260-4893	1-1/16 inch Tandem Master Cylinder (aluminum housing)
260-8555	Wilwood 1 inch Aluminum Tandem Chamber Master Cylinder
260-8556	Wilwood 1-1/8 inch Aluminum Tandem Chamber Master Cylinder
220-7056	Stainless Steel Braided Flexline Kit, Universal, 14 Inch, Domestic, 3/8-24 IF
220-7699	Stainless Steel Braided Flexline Kit, Universal, 16 Inch, Domestic, 3/8-24 IF
220-8307	Stainless Steel Braided Flexline Kit, Universal, 18 Inch, Domestic, 3/8-24 IF

ASSEMBLY INSTRUCTIONS

FOR

WILWOOD ELECTRONIC PARKING BRAKE (EPB) DUAL CALIPER SYSTEM WIRING INSTALLATION INSTRUCTIONS

FOR USE WITH WILWOOD REAR EPB CALIPER PARKING BRAKE KITS

DISC BRAKES SHOULD ONLY BE INSTALLED BY SOMEONE EXPERIENCED AND COMPETENT IN THE INSTALLATION AND MAINTENANCE OF DISC BRAKES

READ ALL WARNINGS

WARNING

IT IS THE RESPONSIBILITY OF THE PERSON INSTALLING ANY BRAKE COMPONENT OR KIT TO DETERMINE THE SUITABILITY OF THE COMPONENT OR KIT FOR THAT PARTICULAR APPLICATION. IF YOU ARE NOT SURE HOW TO SAFELY USE THIS BRAKE COMPONENT OR KIT, YOU SHOULD NOT INSTALL OR USE IT. DO NOT ASSUME ANYTHING. IMPROPERLY INSTALLED OR MAINTAINED BRAKES ARE DANGEROUS. IF YOU ARE NOT SURE, GET HELP OR RETURN THE PRODUCT. YOU MAY OBTAIN ADDITIONAL INFORMATION AND TECHNICAL SUPPORT BY CALLING WILWOOD AT (805) 388-1188, OR VISIT OUR WEB SITE AT WWW.WILWOOD.COM. USE OF WILWOOD TECHNICAL SUPPORT DOES NOT GUARANTEE PROPER INSTALLATION. **YOU**, OR THE PERSON WHO DOES THE INSTALLATION MUST KNOW HOW TO PROPERLY USE THIS PRODUCT. IT IS NOT POSSIBLE OVER THE PHONE TO UNDERSTAND OR FORESEE ALL THE ISSUES THAT MIGHT ARISE IN YOUR INSTALLATION.

RACING EQUIPMENT AND BRAKES MUST BE MAINTAINED AND SHOULD BE CHECKED REGULARLY FOR FATIGUE, DAMAGE, AND WEAR.

Need Additional Information? Use Your SmartPhone and Jump to Our Technical Tips Section on Our Web Site.

WARNING

DO NOT OPERATE ANY VEHICLE ON UNTESTED BRAKES!

SEE MINIMUM TEST PROCEDURE WITHIN

ALWAYS UTILIZE SAFETY RESTRAINT SYSTEMS AND ALL OTHER AVAILABLE SAFETY EQUIPMENT WHILE OPERATING THE VEHICLE

IMPORTANT • READ THE DISCLAIMER OF WARRANTY INCLUDED IN THE KIT

NOTE: Some cleaners may stain or remove the finish on brake system components. Test the cleaner on a hidden portion of the component before general use.

Important Notice - Read This First

Before any tear-down or disassembly begins, review the following information:

- ***Warning: This electronic parking brake system is intended to function as a parking brake and not as an emergency stop brake. However, it is possible to actuate the EPB at any time and speed. Actuating the EPB while the vehicle is moving may cause the rear wheels to lock up and skid which may lead to a reduction in vehicle control.***
- **Installation of this kit should only be performed by individuals experienced in the installation and proper operation of disc brake systems.**
- **Due to OEM production differences and other variations from vehicle to vehicle, the fastener hardware and other components in this kit may not be suitable for a specific application or vehicle.**
- **It is the responsibility of the purchaser and installer of this kit to verify suitability / fitment of all components and ensure all fasteners and hardware achieve complete and proper engagement. Improper or inadequate engagement can lead to component failure.**

Photographic Tip

Important and highly recommended: Take photos of brake system before disassembly and during the disassembly process. In the event, trouble-shooting photos can be life savers. Many vehicles have undocumented variations, photos will make it much simpler for Wilwood to assist you if you have a problem.

Parts List

ITEM NO.	DESCRIPTION	QTY
1	EPB Caliper Assembly (Right and Left)	2
2	EPB Control Unit (ECU)	1
3	Switch	1
4	Switch Face Plate	1
5	Switch Connector, Pig Tail (wires)	1
6	Wiring Harness	1

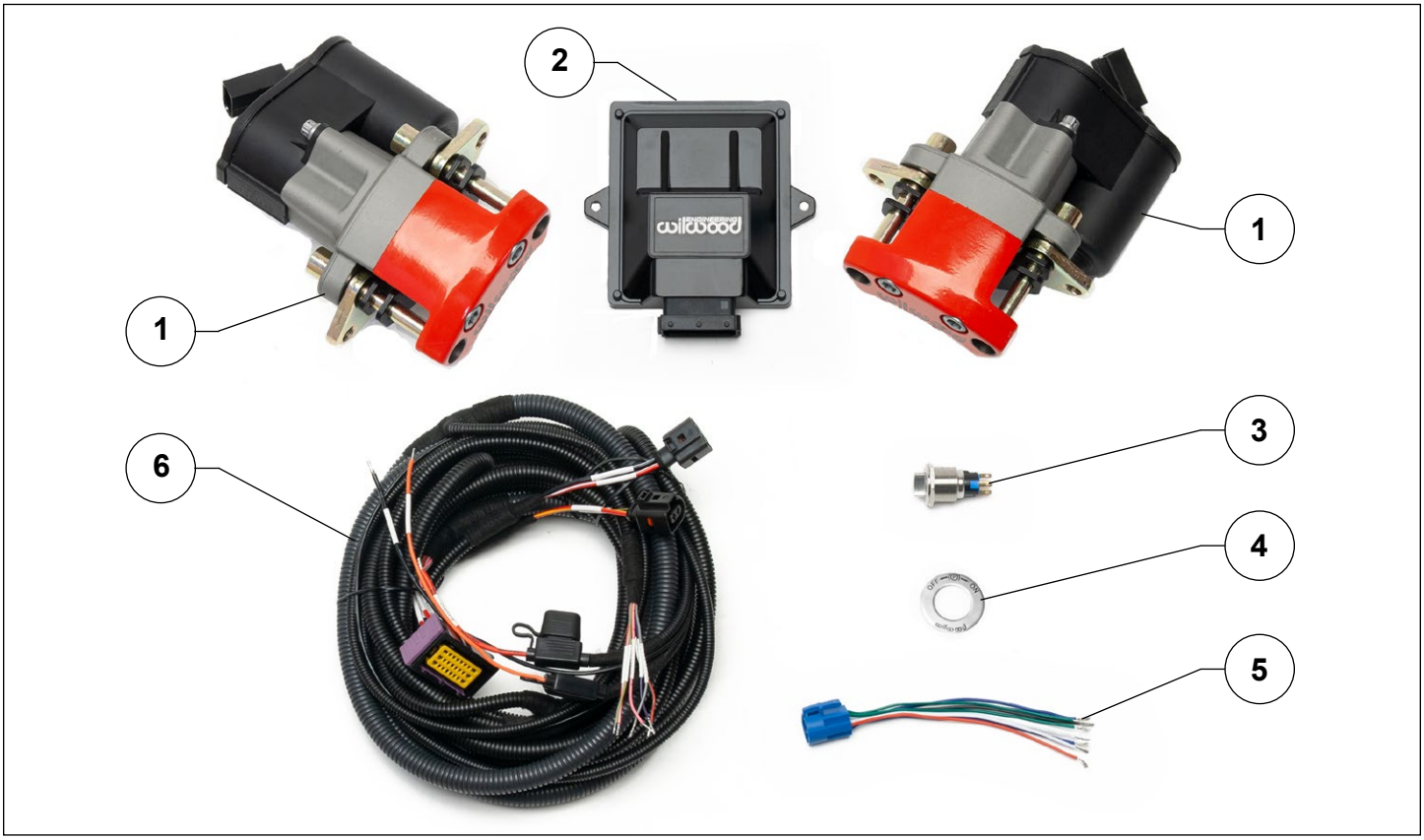

Photo 1 (Numbered items refer to the parts list above)

Installation Instructions

Component mounting

- Determine mounting locations for the EPB control unit, EPB control switch, and EPB calipers. The wiring harness routing should be taken into account when determining the component mounting locations.
- EPB CONTROL UNIT (ECU) - Securely mount the EPB control unit in a suitable location inside the vehicle, such as under the dash. Be sure to allow adequate access to the control unit cable connector. See Figure 1 for mounting dimensions.
- EPB CONTROL SWITCH - Mount the EPB switch in an easily accessible location within arm's reach of the driver. The switch mounts to a panel with a .875" diameter hole. See Figure 2 for mounting dimensions.
- EPB CALIPER - Mount the EPB calipers per the installation instructions included with your specific Wilwood brake kit, reference Figure 3. EPB calipers are left and right handed, however they can be used on either side of the vehicle to best suit your specific application.
- EPB WIRING HARNESS - All wiring harness leads are labeled – refer to wiring diagram, Figure 4. Carefully route harness cables/wires to prevent contact with moving or rotating components and away from heat sources and pinch points. ***NOTE:*** *Wilwood EPB harness is designed for use in many different vehicle applications and it is the installer's responsibility to properly route cables/wires and ensure adequate clearance and retention for EPB components.*

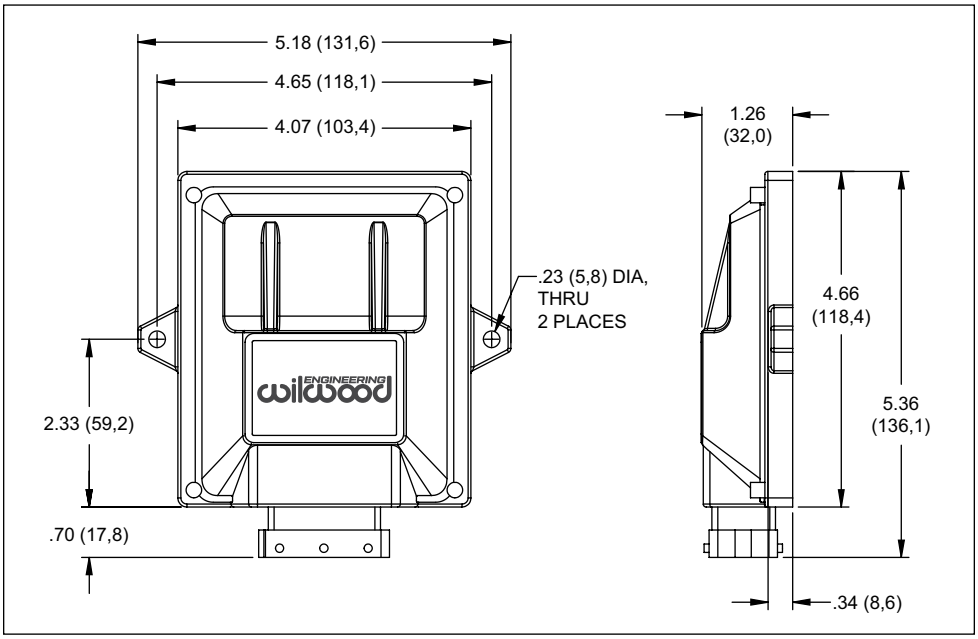

Figure 1. EPB Control Unit

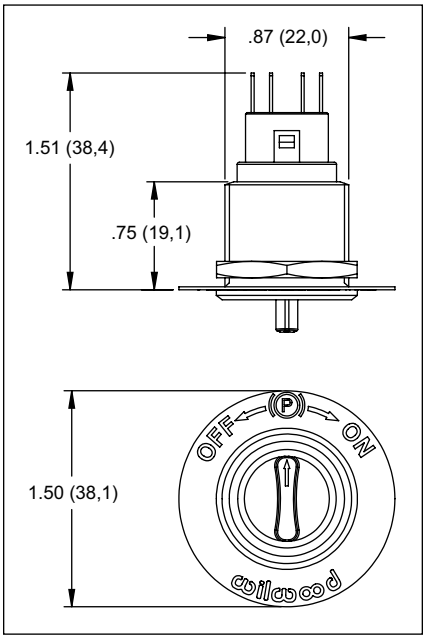

Figure 2. Control Switch

Wiring installation - Refer to wiring diagram, Figure 4

- Disconnect negative (ground) cable from the battery.
- ***NOTE:*** *Most wires in the EPB harness may be shortened or lengthened if needed to suit a specific application.* Avoid lengthening the BATTERY (+) and GND (ground) wires. Use good practices. All wire splices should be soldered and covered with shrink tubing. When lengthening wires, always match the gauge of the new wire to the existing harness wire gauge.
- Connect the RIGHT-MOTOR connector to the EPB caliper motor mounted on the right hand side of the vehicle, and the LEFT-MOTOR connector to the left side. This will assure the correct caliper can be identified in the event of a caliper related fault code from the ECU.
- Carefully connect the large ECU connector to the EPB control unit.
- Connect the ACC lead to an ignition ON or Accessory power source, usually at the fuse panel. Do NOT connect this lead directly to battery power.
- The EPB switch connector must be indexed to the back of the switch by aligning the connector lock tab with the mating feature on the switch, as shown in Photo 2.

DISC WIDTH		"B" MOUNT OFFSET	
.16-.39	(4,0-10,0)	0.75	(19,1)
.81	(20,6)	1.17	(29,7)
1.10	(27,9)	1.46	(37,1)
1.25	(31,8)	1.61	(40,9)

DISC DIAMETER	"A" BOLT CIRCLE RADIUS	"E" OUTSIDE RADIUS
11.00 (279,4)	5.56 (141,2)	6.63 (168,4)
11.75 (298,5)	6.00 (152,4)	7.00 (177,8)
12.00 (304,8)	6.12 (155,4)	7.13 (181,1)
12.19 (309,6)	6.20 (157,5)	7.22 (183,4)
12.88 (327,2)	6.52 (165,6)	7.57 (192,3)

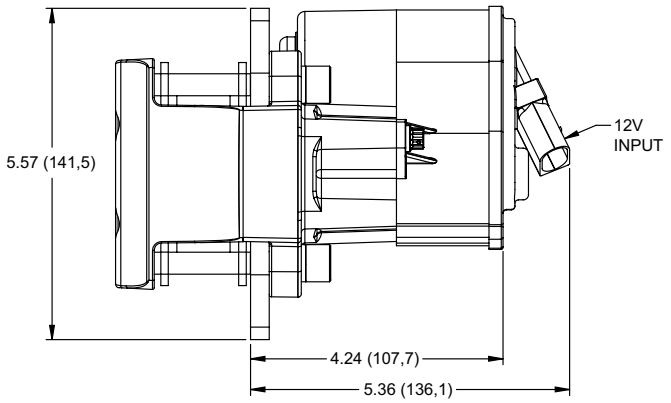

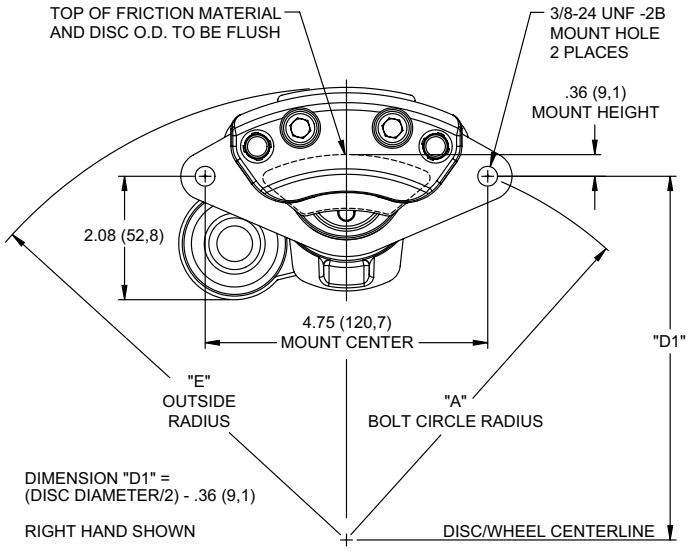

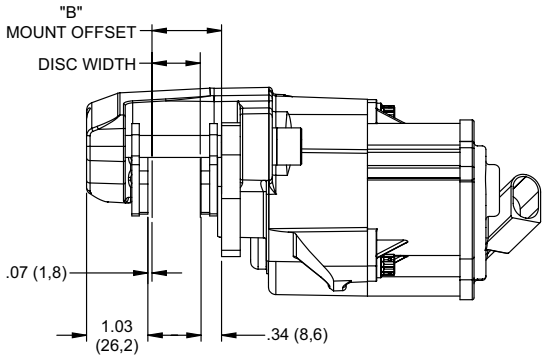

Figure 3. EPB Caliper

- Match the 6 harness wires for the switch to the corresponding 8 pigtail wires on the switch connector, as shown in the wiring diagram. ***NOTE:*** *The three red/white wires on the switch pigtail are to be connected to the single red/white wire in the harness.* Solder all connections and cover with shrink tubing.
- Attach the GND (ground) wire to a clean solid ground point location or post. A good ground is necessary for proper operation of this EPB system as all of the EPB motor amperage must travel through this ground point.
- The BATTERY (+) wire must be attached directly to the positive (+) terminal on the battery or to a primary 12V+ power post that is directly fed by a heavy gauge battery cable, such as the starter solenoid battery terminal.
- ***Caution:*** *The 40 amp fuse included in the new wiring harness must remain in the 12V+ circuit.* Do not bypass or remove this fuse from the circuit.
- If desired, an existing instrument cluster “brake” light may be utilized by adding a new customer supplied relay circuit triggered by the gray/yellow switch wire labeled LED (-). ***Caution:*** *The LED (-) wire does not supply 12V power, it only completes a ground when activated, so the relay will need 12V power supplied from another source.*
- Reconnect negative cable to the battery and test EPB function per the following instructions.

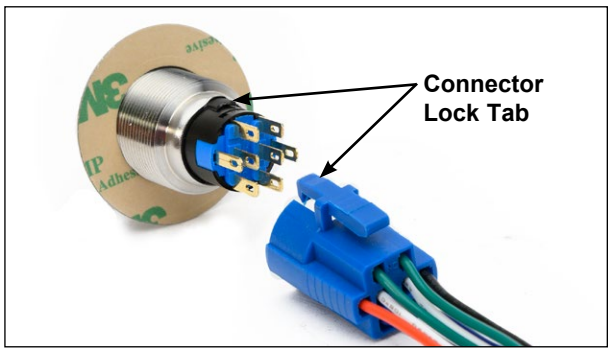

Photo 2. Switch Installation Alignment

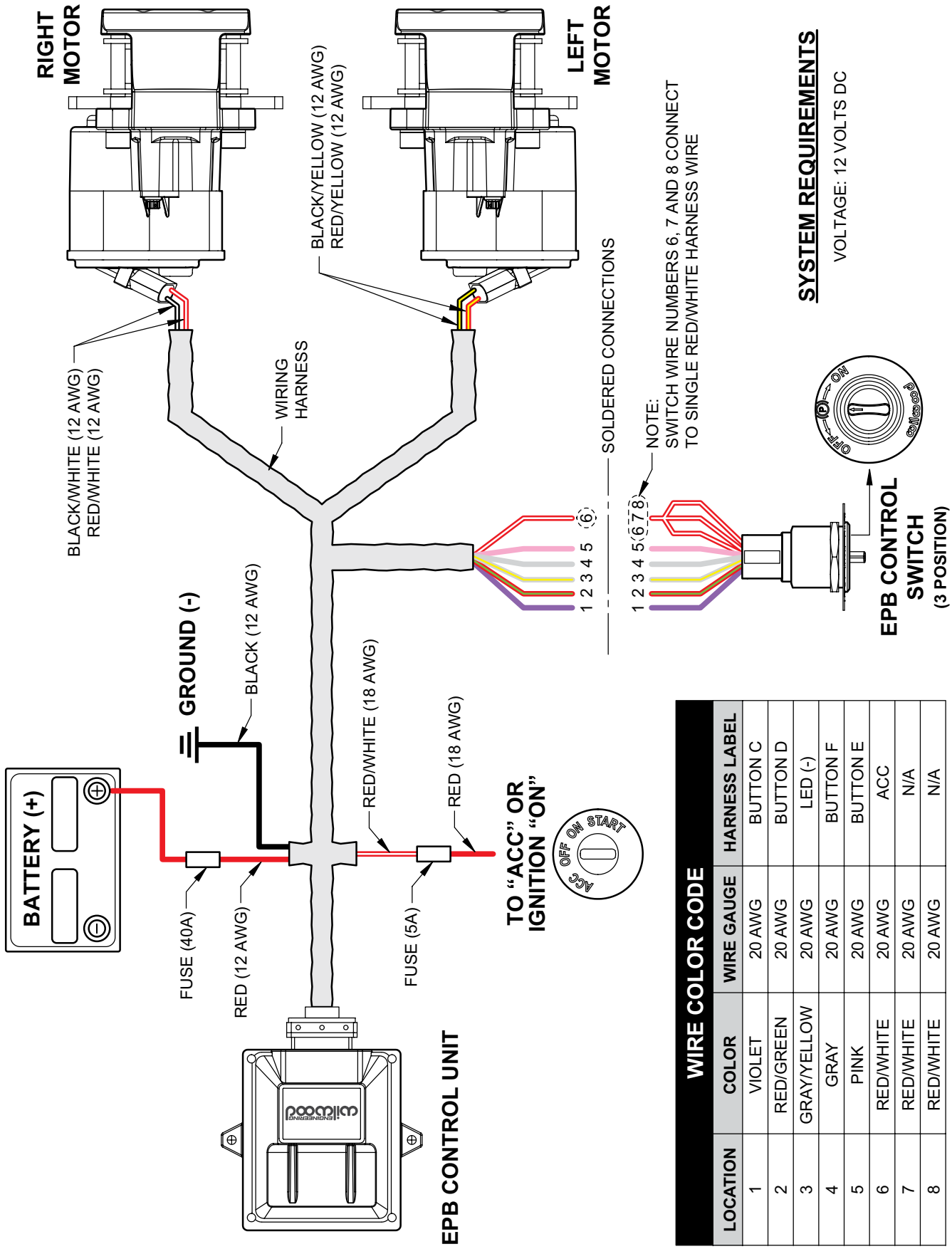

WIRE COLOR CODE			
LOCATION	COLOR	WIRE GAUGE	HARNESS LABEL
1	VIOLET	20 AWG	BUTTON C
2	RED/GREEN	20 AWG	BUTTON D
3	GRAY/YELLOW	20 AWG	LED (-)
4	GRAY	20 AWG	BUTTON F
5	PINK	20 AWG	BUTTON E
6	RED/WHITE	20 AWG	ACC
7	RED/WHITE	20 AWG	N/A
8	RED/WHITE	20 AWG	N/A

Figure 4. EPB Wiring Diagram

EPB operation

- The EPB control switch is momentary – there is no need to hold the switch in position to operate the EPB. Rotate the switch clockwise to engage parking brake and counter-clockwise to release.
- The red indicator light on the EPB control switch will illuminate when the EPB is engaged, but only while the ignition is ON. The light will go out once when the EPB is released. If the indicator light flashes, there is a fault in the system. Refer to the troubleshooting section below.
- Complete brake kit installation per the instructions included with your specific Wilwood brake kit.
- Once the installation is complete, test parking brake in a safe area, first on a flat surface by pushing on the vehicle, then on a slight incline, followed by a steeper incline.

Troubleshooting

- In the event of a fault in the EPB system, the indicator light on the switch will flash out a two-digit diagnostic trouble code. Reference Table 1 below, determine the cause of the fault based on the two-digit fault code. ***NOTE:*** *Fault codes are not stored and are reset after the ignition is turned OFF.* If a fault code appears (flashing light), turn ignition OFF and back ON. If flashing continues, count flashes to read faulty code.
- If you still are having problems with the installation, contact your Wilwood retailer where the product was purchased. Additional technical support is available by calling Wilwood Sales and Technical department at (805) 388-1188 or e-mail additional assistance at: info@wilwood.com.

Table 1. Troubleshooting

DIAGNOSTIC TROUBLE CODES (FLASHING LIGHT)					
FIRST DIGIT		SECOND DIGIT			
TIMES	FAILURE	1	2	3	4
1	EPB ECU FAILURE	INTERNAL ECU FAILURE 1	INTERNAL ECU FAILURE 2		
2	VOLTAGE FAILURE			BATTERY TOO HIGH	BATTERY TOO LOW
3	NOT APPLICABLE				
4	NOT APPLICABLE				
5	FUNCTION OR MOTOR FAILURE	LEFT CALIPER DID NOT ENGAGE (TARGET AMP DID NOT GET ACHIEVED)	RIGHT CALIPER DID NOT ENGAGE (TARGET AMP DID NOT GET ACHIEVED)	LEFT CALIPER DID NOT RELEASE CORRECTLY	RIGHT CALIPER DID NOT RELEASE CORRECTLY

Brake Testing

WARNING • DO NOT DRIVE ON UNTESTED BRAKES
BRAKES MUST BE TESTED AFTER INSTALLATION OR MAINTENANCE
MINIMUM TEST PROCEDURE

- Make sure pedal is firm: Hold firm pressure on pedal for several minutes, it should remain in position without sinking. If pedal sinks toward floor, check system for fluid leaks. DO NOT drive vehicle if pedal does not stay firm or can be pushed to the floor with normal pressure.
- At very low speed (2-5 mph) apply brakes hard several times while turning steering from full left to full right, repeat several times. Remove the wheels and check that components are not touching, rubbing, or leaking.
- Carefully examine all brake components, brake lines, and fittings for leaks and interference.
- Make sure there is no interference with wheels or suspension components.
- Drive vehicle at low speed (15-20 mph) making moderate and hard stops. Brakes should feel normal and positive. Again check for leaks and interference.
- Always test vehicle in a safe place where there is no danger to (or from) other people or vehicles.
- Always wear seat belts and make use of all safety equipment.

Parking Brake

WARNING • PARKING BRAKE

- The holding ability of the brake should be tested by stopping on a sloping surface and applying the parking brake while holding car with the hydraulic foot brake. This should be accomplished both facing up and down hill.
- Do not rely exclusively on the parking brake to hold the car; Curb wheels as recommended by the applicable diagram and put gear selector in park, or shift into first gear or reverse with a manual transmission.

- Diagram A - When parking facing downhill, turn front wheels towards the curb or right shoulder. This will keep from rolling into traffic if the brakes become disengaged.
- Diagram B - Turn the steering wheel to the left so the wheels are turned towards the road if you are facing uphill with a curb. The tires will catch the curb if the car rolls backward.
- Diagram C - When facing uphill without a curb, turn the wheels sharply to the right. If the vehicle rolls, it will go off the road rather than into traffic.
- When parking on a hill, always set the parking brake and move the gear selector into park, or shift into first or reverse gear if your vehicle has a manual transmission.

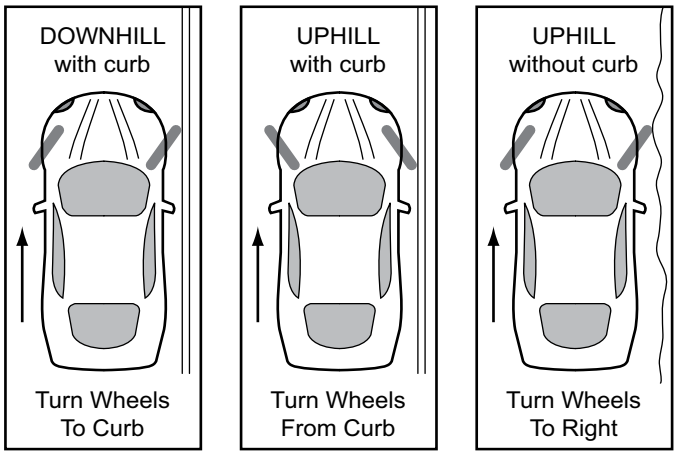

Diagram A Diagram B Diagram C

Connect with Wilwood

Wilwood Facebook Wilwood Twitter Wilwood YouTube

Wilwood Disc Brakes • 4700 Calle Bolero, Camarillo, CA 93012 Phone 805 / 388-1188 • Fax 805 / 388-4938
www.wilwood.com • E-mail Additional Assistance: info@wilwood.com
DS-1353B REV DATE: 05-07-21