INSTRUCTIONS

© 2023, Speedway Motors, Inc.

910-89670 - 4L80E Transmission Mockup

KIT CONTENTS			
Qty	P/N	Description	Item #
1	910-89670.1	Bellhousing Mount	1
1	910-89670.2	Transmission Centerline	2
1	910-89670.3	Left Edge Weldment	3
1	910-89670.4	Right Edge Weldment	4
1	910-89670.5	Center Section 1	5
1	910-89670.6	Center Section 2	6
1	910-89670.7	Center Section 3	7
1	910-89670.8	End Plate	8
1	910-89670.9	Oil Pan Mount	9
1	910-89670.10	Left Box	10
1	910-89670.11	Tail Shaft Weldment	11
1	910-89670.12	Shifter Shaft	12
1	910-89670.13	Hardware Kit	

HARDWARE			
Qty	Description	Tool Size	Item #
14	Serrated Flange Hex Head, Zinc Plated, M8-1.25-16	10mm Hex	H1
4	Serrated Flange Hex Head, Zinc Plated, M10-1.50-20	13mm Hex	H2
14	Serrated Flange Nut, Zinc Plated, M8-1.25	13mm Hex	H3
5	Serrated Flange Nut, Zinc Plated, M10-1.50	15mm Hex	H4

Assembly:

1. Count and ensure that all listed parts in the instructions sheet are supplied.

2. Using the supplied 10mm hardware, fasten the rear bellhousing face (1) to center section 1 (5). Leave the bolts finger tight.

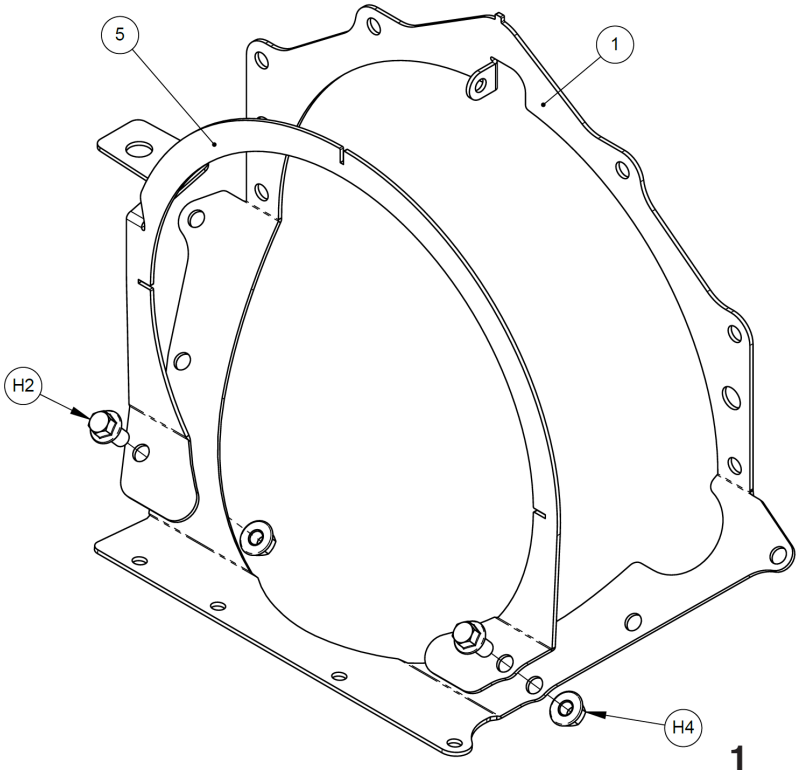

© 2023, Speedway Motors, Inc.

3. Place parts 3 and 4 through each center section (5, 6, & 7) in the order they are arranged below. Once all parts are in their relative position they can be pushed into their respective slots and locked down using both 8 and 10mm hardware. Parts 3 and 4 are secured to part 1 with two 10mm nuts and bolts and part 2 is secured to 1 using a single 8mm nut and bolt.

Again, leave the bolts finger tight.

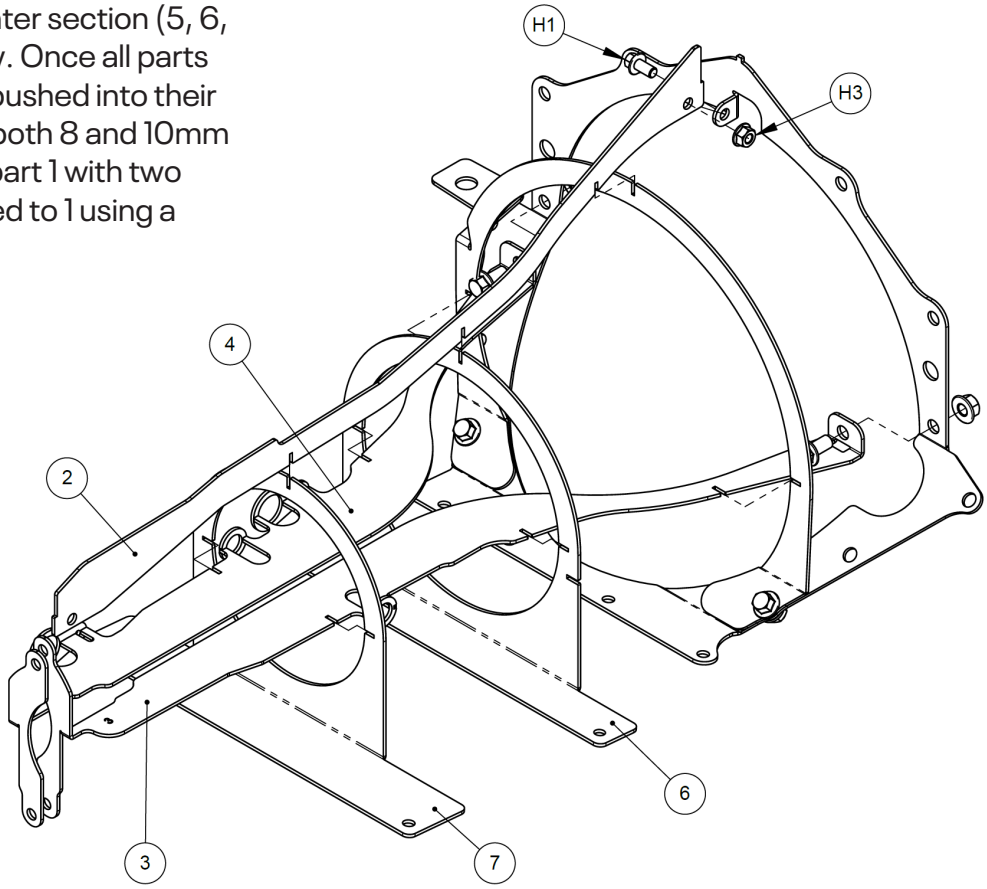

4. The end plate (8), oil pan mount (9), and left box (10) can all be retained with the supplied 8mm hardware as shown. **DO NOT** put any bolts through part 8 connecting it to 3 and 4 as this is reserved for step 5.

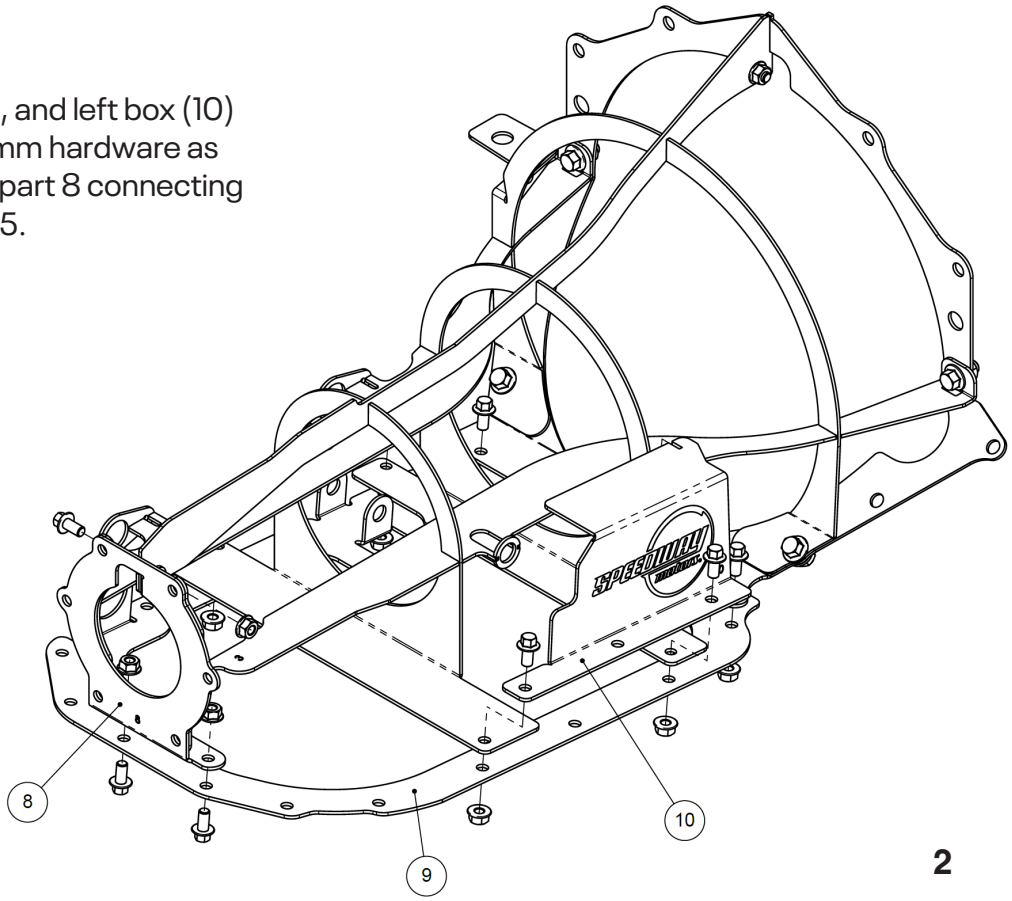

© 2023, Speedway Motors, Inc.

5. Retain the tail shaft (11) with 8mm bolts passing through part 8 and either part 3 or 4. Four bolts should be used to fully retain the tail shaft weldment. The shifter shaft can be inserted through the two tabs on the oil pan mount and retained with a single 10mm nut as shown.

6. Tighten all bolts.

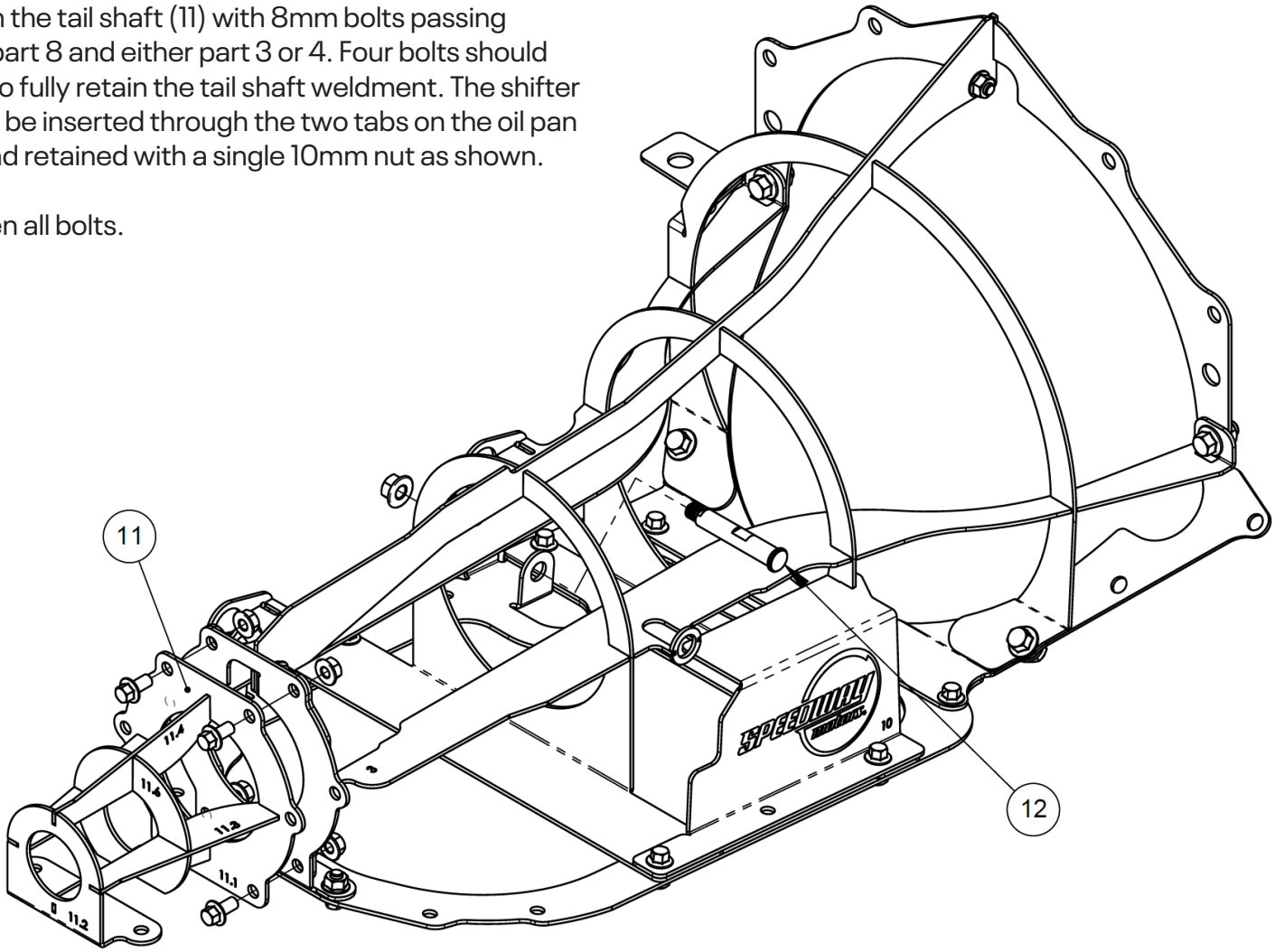

IMPORTANT

DISCLAIMER In an effort to offer our customers low prices, quick service and great value, Speedway Motors reserves the right to change suppliers, specifications, colors, prices, materials without notice. Prices and policies that were current and in effect at the time of printing are also subject to change without notice. Quantities are limited on some items. Any unauthorized use of this catalog including words, photos or drawings is prohibited. Speedway is not responsible for any typographical errors, printing errors or misinterpretations

WARRANTY DISCLAIMER Purchasers understand and recognize that racing parts, specialized street rod equipment, and all other parts and services sold by Speedway Motors, Inc. are exposed to many and varied conditions due to the manner in which they are installed and used. Except for certain limited warranties, if any, set forth in Speedway Motors, Inc.'s current catalog with respect to the products and/or parts thereof identified on your invoice, each product, and each part thereof, is sold "as is", and "with all faults" and Speedway Motors, Inc. makes no warranties either expressed or implied, written or oral, with regard such products and services including, without limitation, any warranty of merchantability or fitness for a particular purpose. Without limiting the foregoing, there is no warranty expressed or implied as to whether the goods sold hereby will protect purchasers or ultimate end-users of such products and parts from injury or death. In no event shall Speedway Motors, Inc. be liable for any special, incidental or consequential damages, or any other damages whatsoever arising out of or connected with the use or misuse of the products and each part thereof. Purchasers acknowledge and agree that no person, entity or agent of Speedway Motors, Inc. has any authority to make any statement contrary to this disclaimer and that any warranty statements or representations allegedly made on behalf of Speedway Motors, Inc. by any such person, entity or agent are void. Purchasers are relying solely on their own skill and judgment to select, purchase and use suitable products and assume all responsibility and risk with regard thereto. Some local laws prohibit the use of utility jugs, funnels and barrel pumps for dispensing fuel. Please check your own state for more information, regulations or further direction in your use of the utility jugs, funnels and barrel pump described in Speedway Motors catalogs or on Speedway Motors websites. Some parts in this catalog are not legal for sale or use in California. Items sold in this catalog are for racing vehicles which may never be used on a highway. The use of manufacturer's names and symbols are for reference purposes only.

DAMAGE CLAIMS Please inspect all packages upon delivery and in the presence of the delivery driver when possible. The driver must note any visible damage and provide procedures for handling damage claims. To allow for a claims process, please retain original box, packing material and damaged merchandise. Contact Speedway Motors for instructions regarding damage claim within 5 days of receipt. Speedway Motors assumes no liability after this period.

SHORTAGES Please check the contents of your delivery to ensure that all parts ordered are received. Refer to your invoice to cross check all items received and inspect all packing materials for contents of small items. Retain original shipping box and packing materials. Orders may be split into multiple boxes which can be delivered on different days. Contact Speedway Motors for instructions regarding shortage claim within 5 days of receipt. Speedway Motors assumes no liability after this 5 day period.

REFUSALS All refused packages will be billed the freight to and from the destination and refused COD orders will be billed a 15% restocking charge plus freight to and from destination.

WARRANTY CLAIMS If the item is used or installed and a warranty claim request is submitted, warranty work is done by the manufacturer and may take up to 30 days for processing. Speedway Motors will be required to follow the manufacturer's warranty instructions to allow for a credit refund or exchange when specified.

Find the above info on our website:

SpeedwayMotors.com/Info/FAQ

RETURNS We want you to be satisfied with your purchase. If you are not satisfied, you may return your new, unused item within 60 days for refund or exchange.

All exchanged or returned merchandise must be in original factory condition with no modifications or alterations. Returned merchandise must include original packaging materials, warranty cards, manuals, instructions, etc. If the returned item requires repackaging, your refund / exchange will be subject to a repackaging charge. Return/Exchange transactions less than $99 are excluded from the free shipping offer.

HOW TO RETURN AN ITEM Please re-pack the item in a sturdy box, include a copy of your invoice and completed return form. Returns must be shipped prepaid. CODs are not accepted. Shipping costs for exchanged merchandise will be charged to your credit card.

Items that are returned after 60 days are subject to a 15% restocking charges. Fiberglass items returned will be subject to a 15% restocking charge. We are unable to accept returns on electrical parts, video tapes, DVD's, books, special order or closeout merchandise.

BRAKE INSTALLATION ALERT The selection and installation of brake components should only be done by personnel experienced in the proper installation and operation of braking systems. The installer must use his/her own discretion to determine the suitability of all brake components and brake kits for every particular application. Speedway Motors, Inc. makes no warranties either expressed or implied including any warranty of merchantability or fitness for a particular purpose, other than those contained in its current catalog or website with respect to the goods identified on the face of the invoice. There is no warranty expressed or implied as to whether the goods sold hereby will protect the purchaser or ultimate user of such goods from injury of death.

EXHAUST INSTALLATION ALERT Exhaust systems and other component surface finishes are not permanent. Coatings, paint and other factory supplied cosmetic treatments are only intended to protect from surface corrosion in an unused state. No returns are allowed after the parts have been installed. Header flanges must be clean and clear of paint and surface contaminants prior to mating to exhaust gaskets. Exhaust fasteners must be re-torqued after the initial heat cycle and regularly thereafter to ensure a proper gasket seal is maintained. Should you decide to install this exhaust product at your home, be warned that pleasure car or light duty truck/van "bumper" jacks are intended for emergency use only. The use of frame contact jack stands in conjunction with a floor jack as a main support is highly recommended to minimize accidental dropping of a vehicle while the installation proceeds. We recommend the use of a shop hoist if possible. Please use caution! Speedway Motors, Inc. makes no warranties either expressed or implied including any warranty of merchantability or fitness for a particular purpose, other than those contain in its current catalog or website with respect to the goods identified on the face of the invoice. There is no warranty expressed or implied as to whether the goods sold hereby will protect the purchaser or ultimate user of such goods from injury or death.

CHECK LOCAL LAW Some parts are not legal for sale or use in California on any pollution controlled motor vehicles. These items are legal in California for racing vehicles only which may never be used upon a highway. Check local law.

© 2023, Speedway Motors, Inc.

Speedway Motors, Inc.
P.O. Box 81906 • Lincoln, NE 68501
800.979.0122 • SpeedwayMotors.com